KINCROME EVOLUTION

Tool Chest

8 Drawer Deep/Wide
1042mm (41")

K7948

Operation Manual

IMPORTANT: This operating manual contains important safety information, read carefully & understand all information before operating the chest. Save this manual for future use.

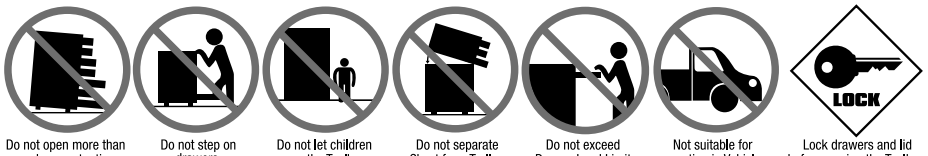

Do not open more than one drawer at a time. | Do not step on drawers. | Do not let children near the Toolbox. | Do not separate Chest from Trolley. | Do not exceed Drawer Load Limit | Not suitable for mounting in Vehicles | Lock drawers and lid before moving the Toolbox.



Parts List



Measurements: **Weight: 51kg**

WIDTH	1042 mm	**DEPTH**	455 mm	**HEIGHT**	488 mm

Measurements - Top Tray

WIDTH	1042 mm	**DEPTH**	445 mm	**HEIGHT**	50 mm

Small Shallow Drawers

WIDTH	560 mm	**DEPTH**	405 mm	**HEIGHT**	45 mm

Small Deep Drawers

WIDTH	316 mm	**DEPTH**	405 mm	**HEIGHT**	104 mm

Large Deep Drawers

WIDTH	560 mm	**DEPTH**	405 mm	**HEIGHT**	104 mm

Maintenance

- Periodically tighten all hardware
- Lubricate the slides twice a year
- Lubricate the lock with graphite annually
- Use a damp Microfibre cloth to clean all surfaces

Tools & Assistance Required for Trolley: **2 People**

Included



Keys x 2

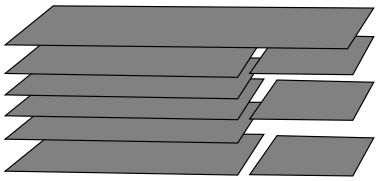

9 x Liners

Tool Chest 8 Drawer Deep/Wide 1042mm (41") K7948

Maintenance

1 Removing the Drawers

- Fully extend the empty drawer.
- Push up the right grey release lever while pushing down the left grey release lever.
- Pull the drawer outward until it is released from the drawer slide.

2 Re-Inserting The Drawers

- Extend the drawer slides.
- Insert the brackets on each side of the drawer into the slots on the slides, being careful that they are properly positioned.
- Once properly inserted, completely close the drawer to set the slides in their proper positions.

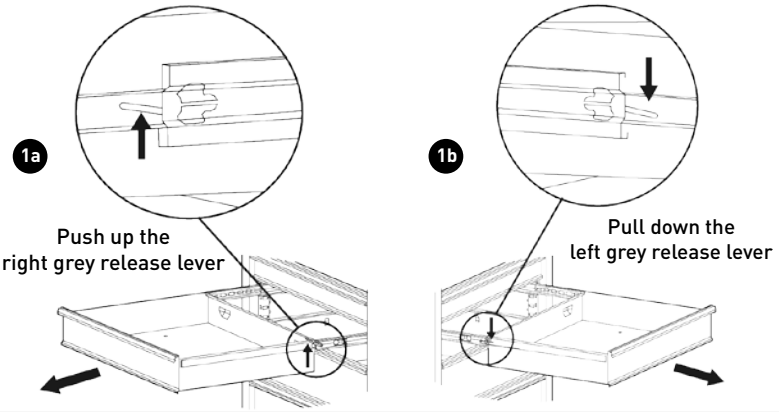

Parts List



Spare Parts

ITEM	PART NO.	DESCRIPTION	QUANTITY
1	K7999-1	Lock & Key	1
2	K7999-2	Key Only (Specify Key Number)	1
3	K7999-7	Gas Struts (Pair)	1

ITEM	PART NO.	DESCRIPTION	QUANTITY
4	K7999-8	Ball Bearing Slide (Pair)	8
5	K7999-5	Side Carry Handle x 1	2
6	K7999-25	Eva Mat Pack 9 Pce	1

National Head Office
National Distribution and Showroom
3 Lakeview Dve, Caribbean Business Park
Scoresby Victoria 3179 Australia
ABN 41 007 185 006

Administration
T (03) 9730 7100 F (03) 9730 7199
E enquiries@kincrome.com.au
W kincrome.com.au

Customer Service Centre
T 1300 657 528 F 1300 556 005

Made to Kincrome Tools & Equipment Pty Ltd Global specifications and quality standards in China
Kincrome UK Ltd PO Box 468 Southampton SO30 9EP

Australia & Global	UK & EU
www.kincrome.com.au	www.kincrome.co.uk
enquiries@kincrome.com.au	enquiries@kincrome.co.uk