KINCROME EVOLUTION

Tool Trolley

13 Drawer Extra Wide
1350mm (53")

K7963

Operation Manual

IMPORTANT: This operating manual contains important safety information, read carefully & understand all information before operating the trolley. Save this manual for future use.

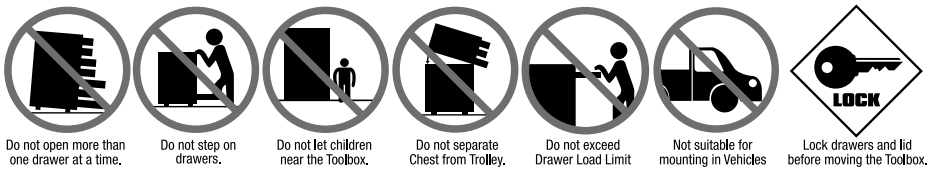

Do not open more than one drawer at a time. | Do not step on drawers. | Do not let children near the Toolbox. | Do not separate Chest from Trolley. | Do not exceed Drawer Load Limit | Not suitable for mounting in Vehicles | Lock drawers and lid before moving the Toolbox.



Parts List



Measurements: **Weight: 96kg**
(External - With Castors - 125 x 50mm (5 x 2") x2 Locking)

WIDTH	1347 mm	**DEPTH**	466 mm	**HEIGHT**	963 mm

Measurements - Top Section

WIDTH	1347 mm	**DEPTH**	466 mm	**HEIGHT**	15 mm

Large Shallow Drawers (Left)

WIDTH	566 mm	**DEPTH**	405 mm	**HEIGHT**	62 mm

Large Deep Drawers (Left)

WIDTH	566 mm	**DEPTH**	405 mm	**HEIGHT**	104 mm

Large Shallow Drawers (Right)

WIDTH	566 mm	**DEPTH**	405 mm	**HEIGHT**	62 mm

Large Deep Drawers (Right)

WIDTH	566 mm	**DEPTH**	405 mm	**HEIGHT**	104 mm

Extra Large Top Drawer

WIDTH	1242 mm	**DEPTH**	405 mm	**HEIGHT**	104 mm

Included


Keys x 2


Trolley Handle x 1


4 x Hex 5mm Bolts for Trolley Handle


13mm x 24 Bolts (24) for Castors (with Washers)


Non-Locking Castors (3)


Locking Castors (3)

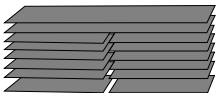
14 x Liners

Tools & Assistance Required for Trolley:


2 People


For Castors: 13mm Spanner

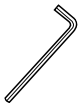
For Handle: 5mm Hex Key

KINCROME EVOLUTION

Tool Trolley

13 Drawer Extra Wide
1350mm (53")

K7963

Assembly Instructions

1 Handle Installing

- Position the trolley side handle behind the holes on the trolley.
- Attach with (4) bolts, and tighten with a 5mm Hex Key.

1



2 Castor Installing (If applicable)

- Be sure the drawers are locked and lay the trolley on its side.
- Secure castors to the unit using the 13mm bolts provided.
- Tighten with a 13mm Spanner.
- Repeat this process for the castors on the opposite of the trolley.
- Return the trolley to its upright position.

Caution: Do not over tighten the bolts.
Caution: Both locking castors must be fitted to front of trolley.

2

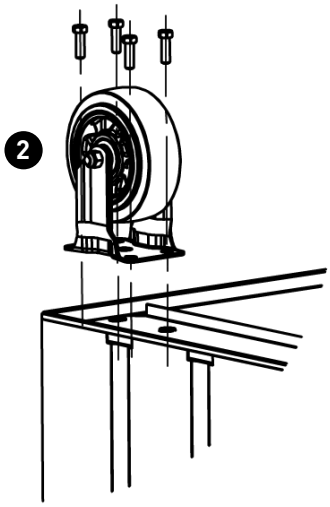

Maintenance

1 Removing the Drawers

- Fully extend the empty drawer.
- Push up the right grey release lever while pushing down the left grey release lever.
- Pull the drawer outward until it is released from the drawer slide.

2 Re-Inserting The Drawers

- Extend the drawer slides.
- Insert the brackets on each side of the drawer into the slots on the slides, being careful that they are properly positioned.
- Once properly inserted, completely close the drawer to set the slides in their proper positions.

1a

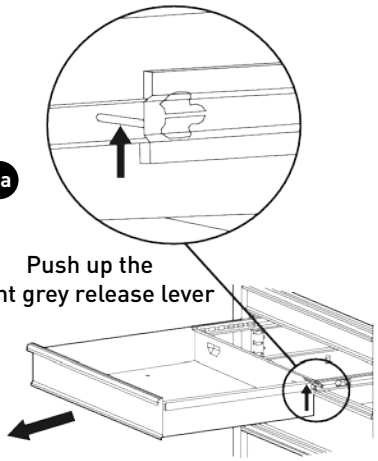

1b

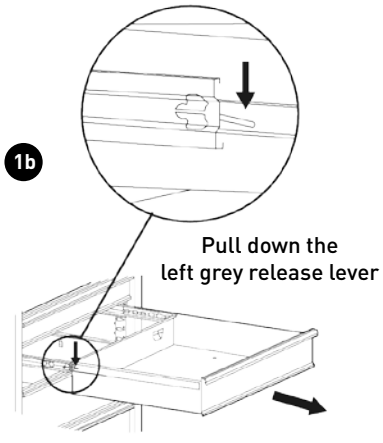

- Periodically tighten all hardware
- Periodically lubricate castors
- Lubricate the slides twice a year
- Lubricate the lock with graphite annually
- Use a damp Microfibre cloth to clean all surfaces

Tool Trolley

13 Drawer Extra Wide
1350mm (53")

K7963

Parts List



Spare Parts

ITEM	PART NO.	DESCRIPTION	QUANTITY
1	K7999-10	Lock & Key	1
2	K7999-11	Key Only (Specify Number)	1
3	K7999-12	Trolley Handle	1
4	K7999-8	Ball Bearing Slide (Pair)	13

ITEM	PART NO.	DESCRIPTION	QUANTITY
5	K7999-29	Eva Mat Pack 14 Pce	1
6	K7999-13	Castor Swivel x 1	3
7	K7999-14	Castor Swivel x 1 (Brake)	3
8	K7999-15	Castor Bolt Pack	1

National Head Office
National Distribution and Showroom
3 Lakeview Dve, Caribbean Business Park
Scoresby Victoria 3179 Australia
ABN 41 007 185 006

Administration
T (03) 9730 7100 F (03) 9730 7199
E enquiries@kincrome.com.au
W kincrome.com.au

Customer Service Centre
T 1300 657 528 F 1300 556 005

Made to Kincrome Tools & Equipment Pty Ltd Global specifications and quality standards in China
Kincrome UK Ltd PO Box 468 Southampton SO30 9EP

Australia & Global	UK & EU
www.kincrome.com.au	www.kincrome.co.uk
enquiries@kincrome.com.au	enquiries@kincrome.co.uk