KINCROME®

PROFESSIONAL QUALITY TOOLS

VERTICAL TRANSMISSION STAND 500kg

- 500KG WORKING LOAD LIMIT
- LIFTING RANGE 1140-1945MM
- DEAD MANS HANDLES FOR ADDED SAFETY



K12120

ED1 DECEMBER 2017

500KG VERTICAL TRANS STAND

Table Of Contents

Know Your Product 2
Important Safety Instructions 3
Assembly and Operation Instructions..... 3-4
Cleaning, Maintenance & Storage.....4-5
Warranty..... 5

Know Your Product

1. Saddle
2. Hydraulic Ram
3. Release Valve
4. Purge Cap
5. Handle
6. Hydraulic Cylinder
7. Foot Pedal
8. Support Legs
9. Swivel Castors

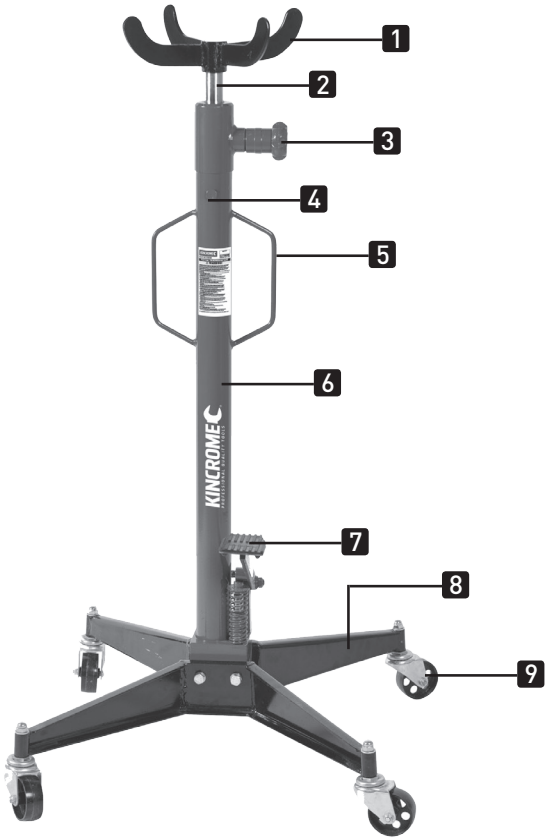

Specifications

Model No: K12120
Safe Working Load: 500kg
Height Lowered: 1140mm
Height Raised: 1945mm
Lift Height: 805mm
Weight: 23.00kg

500KG VERTICAL TRANS STAND

IMPORTANT SAFETY INFORMATION

WARNING! The Use of an transmission stand has inherent dangers, to avoid risk of personal injury or property damage, make sure you are full aware of the operating instructions for this product.

1. The warnings, cautions and instructions discussed in this instruction manual cannot cover all possible conditions and situations that may occur. It must be understood that common sense and caution are factors which cannot be built into this product, but must be applied by the operator.
2. Ensure all preliminary checks are carefully carried out before use of jack. Immediately repair or replace damaged parts (use authorised service agent). Ensure use of genuine parts only. Unauthorised parts may be dangerous and will invalidate the warranty.
3. Use jack on level and solid ground, preferably concrete. Ensure the floor over which the jack will be transported is swept clean.
4. Use jack in a suitable work area. Keep the area clean and tidy and free from unrelated materials. Ensure there is adequate lighting.
5. Before use ensure the gearbox weight and size does not exceed the capacity of the jack.
6. Ensure the vehicle is raised and stabilised at the correct height before attempting to move the jack under the vehicle.
7. Ensure the jack saddle is fully lowered and is clean, dry, and oil free before attempting to transport the jack with or without a load.
8. Keep all unauthorised persons away from the jack during lifting and lowering and when in transit. Keep Children away. Children must never be allowed in the work area. Do not let them handle tools, machines or extension cords.
9. Maintain correct balance and footing. Ensure the floor is not slippery and wear non slipshoes.
10. Dress properly. Do not wear loose clothing or jewellery. Contain long hair. Keep hair, clothing, and gloves away from moving parts. Loose clothes, jewellery, or long hair increases the risk of injury to persons as a result of being caught in moving parts.
11. Ensure that the load is placed level and centrally on the jack saddle and that it is fixed in place before attempting to lift, lower or transport the load.
12. The lowering speed will vary according to the weight of the load and the release valve setting. Diligence is required in ensuring that you continually monitor the operation until completed. Should the jack make any abnormal sounds during use, STOP IMMEDIATELY and contact your local service agent.
13. DO NOT operate the jack if any parts are damaged or missing.
14. DO NOT exceed the rated capacity of the jack.
15. DO NOT raise/lower vehicle lifting platform whilst the Transmission Jack is being used.
16. DO NOT transport the jack with/without a load, with the saddle in the raised position.
17. DO NOT get the jack wet, or use it in damp or wet locations or areas where there is condensation.
18. Stay alert. Watch what you are doing and use common sense when operating the tool.
19. DO NOT use the tool while tired or under the influence of drugs, alcohol, or medication. A moment of inattention while operating the tool increases the risk of injury to persons.
20. DO NOT lift or support vehicles with the jack and do not use the jack as a load sustaining device.
21. DO NOT use the jack for any purpose other than removal, transportation and the installationof transmissions.
22. DO NOT make any modifications to the jack.
23. DO NOT adjust, or tamper with, the safety valve.
24. DO NOT remove any labels from the jack. If the labels are damaged or unclear, replace them.
25. DO NOT use brake fluid to top up the hydraulic unit.
26. Use Kincrome hydraulic oil only.
27. Use a qualified person to lubricate and maintain the jack.
28. Use the right tool for the job. Do not attempt to force a small tool or attachment to do the work of a larger industrial tool, DO NOT use a tool for a purpose it was not intended.

UNPACKING

Place carton in a clear, open area such as a garage floor. Remove components and lay them out neatly on work surface. Make sure all nuts, bolts, washers and pins are properly identified and placed safely unitl needed.

1. Ensure all packaging materials are disposed of as per your local council guide lines.

ASSEMBLING THE ENGINE SUPPORT BAR

1. Assembly the Swivel Castors (9) on the Support Legs (8) using lock washers and nuts provided. Tighten using the supplied spanner and a 19mm spanner (not supplied)
2. Assemble the Support Legs (8) (with the casters) to the Hydraulic Cylinder's (6) base, and slightly secure with the hex bolts and lock washers provided.
3. Then position the Transmission Jack on a hard level surface. Using a 8mm Hex Key (Not Supplied) tighten the hex bolts while all four casters are contacting the floor.
4. 4. Once the Transmission Jack is fully assembled, the Saddle (1) can be place onto the Hydraulic Ram (2) shaft.

KINCROME
PROFESSIONAL QUALITY TOOLS

500KG VERTICAL TRANS STAND

OPERATION

TESTING OPERATION

1. Briefly test the Transmission Jack operation as follows BEFORE using to lift any load.
2. Turning the Release Valve (3) counter clock wise allows jack to be lowered. Once the Releasve Valve (3) is released, it will automatically return to raising position.
3. To raise the Transmission Jack, pump the Foot Pedal (7) a few times to raise jack about halfway. If the Hydraulic Ram (2) does not begin to rise after a few pumps, check to make sure the Release Valve (3) is firmly closed.
4. With the Transmission Jack raised, turn the Release Valve (3) slowly counter clockwise to lower the Transmission Jack. A normal hissing sound may be heard as the Transmission Jack lowers and pressure in Hydraulic Cylinder (6) is released.

PREPARING WORK AREA

Caution: Before using the Transmission Jack, it is important to prepare work area properly. Follow this procedure each time the Transmission Jack is used to help prevent property damage and or serious injury.

1. Thoroughly inspect the Transmission Jack for damage or wear before each use. Briefly test operation of unloaded jack before using to lift any load. If the Transmission Jack is damaged or is malfunctioning DO NOT LIFT ANY LOAD until the problem is corrected.
2. Consult vehicle owner's manual for safety precautions, Transmission weight, and location of support areas on transmission. The Working Load Limit of the Transmission Jack is 500 kg. NEVER EXCEED WORKING LOAD LIMIT OF TRANSMISSION JACK
3. Clear children and others from work area before commencing work. Another adult should be nearby for extra safety and assistance but must be clear of vehicle as it is worked on.
4. Clear obstructions from work area. Working in tight or cluttered work areas is dangerous.
5. Be sure the Transmission Jack and vehicle are on solid, level ground such as paved or concrete driveway or garage floor so the Transmission Jack is free to roll. Uneven or sloped surfaces create hazardous working conditions and dangerously impeded the function of the Transmission Jack.
6. With vehicle in proper position, set vehicle's parking brake or emergency brake and put gearshift in park (manual transmissions should be placed in lowest gear). TURN VEHICLE IGNITION OFF AND TO THE "LOCK" POSITION making sure steering wheel locks.
7. Chock all wheels of vehicle to prevent vehicle rolling. Using wedge-shaped blocks that tyre cannot roll over, position one chock tight against the tyre in both forward and reverse rolling paths.
8. Plan location of Transmission Jack beneath vehicle, making sure Transmission Jack will be contacting only the transmission area of vehicle. Consult vehicle owner's manual for recommended areas.

OPERATION

Lifting a transmission, gearbox, or differential using the Transmission Jack can be dangerous. This Transmission Jack is designed and intended for use by properly trained and experienced personnel only. If you are not familiar with the proper and safe operation of a Transmission Jack, do not use until proper training and knowledge have been obtained.

1. With lifting arm completely lowered, roll the Transmission Jack into position beneath the Transmission of the vehicle.
2. Slowly pump the Foot Pedal (7) until Saddle (1) just begins to contact support area on underside of transmission.
3. Inspect position of Transmission Jacks Saddle (1) making sure it is centered and properly supporting the transmission.
4. Pump Foot Pedal (7) again until Saddle (1) is firm against the transmission.
5. Ensure transmission is securely attached to the Saddle (1), the load may slip or fall if not securely restrained.
6. Unbolt the transmission from vehicle
7. Slowly turn Release Valve (3) counter clockwise to slowly and smoothly lower transmission. Excessive speed or jerky motion can cause the transmission to slip leading to property damage or personal injury.

Working on Vehicle

Any transmission being supported by a jack creates a potentially hazardous working environment.
Never place any part of your body beneath a transmission supported by a jack. Be careful of forces applied to transmission such as torque on a nut or bolt these forces could cause transmission to become unstable on transmission saddle

MAINTENANCE AND STORAGE

Lubricating

Moving parts on the Transmission Jack should be lubricated occasionally with a light machine oil to maintain efficient operation.
Apply oil to joints on lift arm hinges, push rods, handle base, castors, front wheels, and adjusting screws, wipe away excess oil with a soft cloth.

Maintaining Oil Level

Important Note:

When adding or replacing oil, always use a good grade Hydraulic Jack Oil. Avoid mixing types of oil. DO NOT use Brake Fluid, Alcohol, Glycerin, Detergent, Motor Oil or Dirty Oil,mproper fluid can cause serious internal damage to Hydraulic Cylinder (6).

Adding Oil:

With Hydraulic Ram (2) fully lowered & Transmission Jack on level ground, remove Purge Cap (4). Oil level should be at the filler hole. If low, add oil until it start to leak back out then close Purge Cap (4).

Replacing Oil:

For better performance & longevity, replace oil supply once a year. To drain oil, open Purge Cap (4) and loosen the Release Valve (3) by turning counterclockwise. BE VERY CAREFUL not to permit dirt or foreign matter to get into the system. Tilt the jack until all old oil has drained out, refill with Kincrome Hydraulic Jack Oil (K12400) and reinstall the Purge Cap (4) and wipe away any spilt fluid. Prime jack before lifting a load.

Priming/Purging Jack

If the Transmission Jack is not lifting as intended or hydraulic fluid replacements has just been completed then the Transmission Jack needs to be primed/bleed to ensure no air is in the hydraulic system. Remove the Purge Cap (4), undo the Release Valve (3) and allow the Saddle (1) to lower to the lowest position. Pump the Foot Pedal (7) at least ten times (X10) to force air from the system. Wipe away any spilled oil and reinstall the Purge Cap (4), tighten the Release Valve (3) and test the unit.

Cleaning

The Transmission Jack should be wiped clean with soft cloth only. Do not use gasoline, kerosene, or other such solvents or any abrasive cleanser as cleaning agents and solvents will cause deterioration of the hydraulic seals.

Storage

Before storage, twist Release Valve (3) counterclockwise to release pressure in Hydraulic Cylinder (6). Store jack level, in a clean environment, preferably indoors, in a dry area to protect jack from moisture.

Repairing Jack

There are no user serviceable parts except as outlined above. Only trained, licensed and certified repair personnel should attempt any repairs or replacing of parts. Any modifications to the Transmission Jack, except those performed by the manufacturer, or their designee, will void all warranties both written and implied.

Australian Office Contact Details

Phone: 1300 657 528

Fax: 1300 556 005

Email: enquiries@kincrome.com.au

Website: www.kincrome.com.au

UK Office Contact Details

Mail: Kincrome UK Ltd PO Box 646 Eastleigh SO50 0NA

Email: enquiries@kincrome.co.uk

Website: www.kincrome.co.uk

WARRANTY

12 MONTH WARRANTY

Warranty given by Kincrome Tools & Equipment Pty Ltd of 3 Lakeview Drive, Caribbean Park, Scoresby, Victoria, Australia (Tel +61 3 9730 7100) If this product has materials or workmanship defects (other than defects caused by abnormal or non warranted use) you can, at your cost, send the product to place of purchase, an authorised Kincrome service agent or one of Kincromes addresses for repair or replacement. Your rights under this warranty are in addition to any other rights you have under the Australian, United Kingdom & Ireland Consumer Law or other applicable laws. Our goods come with guarantees that cannot be excluded under the Australian, United Kingdom & Ireland Consumer Law. You are entitled to a replacement or refund for a major failure and compensation for any other reasonably foreseeable loss or damage. You are also entitled to have the goods repaired or replaced if the goods fail to be of acceptable quality and the failure does not amount to a major failure. For further details please visit www.kincrome.com.au or call us. Due to minor changes in designor manufacture, the product you purchase may sometimes differ from the one shown on the packaging.

KINCROME®

PROFESSIONAL QUALITY TOOLS

www.kincrome.com.au