KINCROME
TOOLS + EQUIPMENT™

M783010D

MODEL NUMBER:
K16000, K16001, K16002

Owner's Manual

Instructions for Assembly, Testing, Operation, Servicing, and Storage

Kincrome Sprayers: For outdoor use with agricultural pesticides and other liquids**

⚠ WARNING

READ and UNDERSTAND the Owner's Manual completely before using this sprayer. Assemble, test, and use only in accordance with the Owner's Manual instructions.

READ and FOLLOW chemical label instructions. Pesticides are hazardous chemicals.

KNOW emergency procedures BEFORE handling chemicals. Sprayer leaks, bodily chemical contact, poisoning, and spills require immediate response.

AVOID inhaling, ingesting, or coming into contact with any chemicals.

WEAR personal protective gear when filling, using, cleaning, and servicing the sprayer.

KEEP sprayer and spray materials away from children and pets. Pesticides are especially toxic to them.

EXERCISE CAUTION in vehicle handling when towing/hauling a filled sprayer to avoid loss of control or sprayer overturning.

DO NOT TURN ON POWER to sprayer until ready to spray in order to avoid unintentional spray release.

Improper use of the sprayer or handling of chemicals could result in serious injury or illness to the operator or nearby persons/animals, or could cause damage to the environment.

****** This sprayer is recommended for use in spraying non-flammable liquids such as pesticides, water for plants/trees or dust control, ice control chemicals, or water-based non-flammable sealants or stains for outdoor wood surfaces. However, WE RECOMMEND THAT THE SPRAYER NOT BE USED FOR OTHER PURPOSES ONCE IT HAS BEEN USED FOR SPRAYING PESTICIDES. Any chemical will leave some residual in the tank liner or sprayer components, even after the sprayer has been properly cleaned. These residual chemicals can have unexpected effects on future uses. For example, spraying water or other liquids that are contaminated with residual pesticide may result in unforeseen hazards to plant or animal life.

Any Questions, Comments or Parts Orders
Call Kincrome Tools + Equipment 1300 657 528

Table of Contents

	This is the safety alert symbol. It is used to alert you to potential personal injury hazards. Obey all safety messages that follow this symbol to avoid possible injury or death.
⚠DANGER	DANGER (red) indicates an imminently hazardous situation which, if not avoided, will result in death or serious injury.
⚠WARNING	WARNING (orange) indicates a potentially hazardous situation which, if not avoided, could result in death or serious injury.
⚠CAUTION	CAUTION (yellow) indicates a potentially hazardous situation which, if not avoided, may result in minor or moderate injury.
CAUTION	CAUTION (yellow) used without the safety alert symbol indicates a potentially hazardous situation which, if not avoided, may result in property damage. fig01453

Table of Contents

Intended Use 4
Summary of Important Safety Information 5
During Assembly
During Use
- General Chemical Safety
- Chemical Application Safety
- ATV Vehicle Handling Safety
- Chemical Accident Procedures

Warning Label Location 8
Component Inventory
Unpacking 9
Unpacking the Manual Bag 10
Assembly
Step One: Attach lance clips to tank 11
Step Two: Attach drain cap to tank 11
Step Three: Attach gun hose to pump 12
Step Four: Attach hose guide to tank 12
Step Five: Attach gun hose to spray gun 13
Step Six: Unpack and inspect parts from K16001 and K16002 kit bag 14
Step Seven: Attach broadcast bracket to tank 14
Step Eight: Finish broadcast kit assembly 15
Step Nine: Attach sprayer to vehicle 15
Step Ten: Connect remote switch to vehicle battery 16
Step Eleven: Check and test completed assembly 17
Machine Components 18
Operation
Important Safety Information - Operation 20
- General Chemical Safety
- Chemical Application Safety
- ATV Vehicle Handling Safety
- Chemical Accident Procedures

Preparing the Sprayer for Each Use 24
Using the Sprayer
Step One: Assess wind conditions and clear work area 25
Step Two: Fill the sprayer 25
Step Three: Operate the sprayer
- Step 3.1: Model K16000 27
- Step 3.2 Models K16001, K16002 28

Step Four: Clean sprayer and decontaminate after use 33
Storage 34
Preparing for storage
Removing from storage
Troubleshooting 35
Specifications 36
Parts Breakdown – Exploded View 37
Appendix A: Broadcast Spray Calibration Tables 38
Limited Warranty 39

Intended Use

The sprayer is intended for use in spraying agricultural pesticides and other non-flammable liquids.

SPRAYING PESTICIDES:

Pesticides are hazardous chemicals that must be handled with caution as directed throughout this manual and on the pesticide label.

The sprayer is intended for use in spraying pesticides in liquid form only. The sprayer is NOT intended for use in spraying pesticides in dry or aerosolized form, or for use with fumigants..

Sprayers K16001 and K16002 come equipped with a spot spray gun and a tank-mounted broadcast spraying system. Use the spot spray gun if you desire to apply pesticide only on selected plants. Use the broadcast spraying system if you wish to spray large ground areas.

SPRAYING OTHER LIQUIDS:

In addition to spraying pesticides, this sprayer may be used to spray other **non-flammable** liquids. Example uses include: watering plants/trees or spraying water for dust control, applying ice control chemicals, or applying water-based, non-flammable sealant or stain to outdoor wood surfaces. However, **WE RECOMMEND THAT THE SPRAYER NOT BE USED FOR OTHER PURPOSES ONCE IT HAS ALREADY BEEN USED FOR SPRAYING PESTICIDES.** Any chemical will leave some residual in the tank liner or sprayer components, even after the sprayer has been properly cleaned. These residual chemicals can have unexpected effects on future uses. For example, spraying water or other liquids that are contaminated with residual pesticide may result in unforeseen hazards to plant or animal life.

Contact Kincrome Tools + Equipment 1300 657 528 for any questions about the appropriate use of the sprayer and/or optional accessories.

Summary of Important Safety Information

⚠ WARNING

Read and understand **this owner's manual** completely before using the sprayer. Read each **chemical label's instructions** before handling the chemical.

Improper use of the sprayer or handling of chemicals could result in serious injury or illness for the operator or nearby persons/animals, or cause damage to the environment.

LISTED BELOW is a summary of safety information of particular importance. See individual sections of this owner's manual for more details.

---------- DURING ASSEMBLY ----------

- **EXERCISE CAUTION when attaching remote switch to battery terminals**. Follow the steps listed in the Assembly section of this manual i*n exact sequence* when connecting the sprayer's remote switch battery clamps to the battery terminals. *Caution must be exercised to avoid contact with battery acid and to prevent sparking.*
- **CHECK and TEST completed assembly** as directed in this manual. Serious injury could result from chemical leaks if sprayer is improperly assembled.
- **DO NOT MODIFY sprayer design.**

----------DURING OPERATION----------

General Chemical Safety

- **READ and FOLLOW each chemical label's instructions and warnings**.
- **AVOID inhaling, ingesting, or coming into contact with any chemicals**.
- **KNOW applicable licensing and regulatory requirements** for the chemical you plan to use.
- **KNOW emergency procedures before handling chemicals.** Carefully review "Chemical Accident Procedures" listed below and later in this manual. Also see First Aid instructions on the chemical label.
- **WEAR protective clothing, eye protection, and chemical resistant gloves** when filling, using and cleaning the sprayer. Wear additional protective gear, such as facemask or apron, as recommended on the chemical label.
- **EXERCISE EXTRA CAUTION around children and pets.** Pesticides are especially toxic to them. Keep sprayer and spray materials away from them at all times.
- **DO NOT MIX OR POUR chemicals in an enclosed, unventilated area**
- **DO NOT USE flammable or corrosive chemicals** in the sprayer.
- **FLUSH the sprayer before switching chemicals** in order to prevent dangerous chemical interactions.
- **STORE pesticides in a correctly labeled container and in a secure location**.
- **MONITOR the health of operators frequently exposed to pesticides**, as recommended by the chemical label or local/federal regulations.

Chemical Application Safety

Before Spraying

- **INSPECT and PREPARE sprayer before each use** as directed in this manual.
- **DO NOT TURN ON POWER to sprayer until ready to spray** in order to avoid unintentional spray release.
- **MAKE SURE BROADCAST NOZZLE IS ORIENTED to spray straight down** before starting the sprayer. An incorrectly positioned broadcast nozzle may spray chemicals on you or others.

Summary of Important Safety Information

- **DO NOT SPRAY when wind speed exceeds 6.5 kmh** in order to minimize spray drift.
- **CLEAR work area of people/ pets and POST warning notices** to restrict access for the period recommended on chemical label.
- **KEEP sprayer and spray materials away from children/pets**. Pesticides can be especially toxic to children and animals.
- **DO NOT ALLOW anyone younger than 16 to operate sprayer** since pesticides are especially toxic to children.

During Spraying

- **DO NOT OVERAPPLY pesticide**. Apply at rate recommended by chemical manufacturer. Excess pesticide can be dangerous to humans/animals, damage desirable plants, and contaminate soil and water sources.
- **DO NOT EAT, DRINK, SMOKE, RUB YOUR EYES, or TOUCH YOUR BARE SKIN while handling chemicals and spraying**.
- **NEVER POINT THE SPRAY GUN at people or animals.**
- **EXERCISE EXTRA CAUTION when spraying near areas accessible to children and pets**.
- **CLEAN up spills immediately** per instructions on the chemical label.
- **TURN OFF vehicle and set brake or block wheels, TURN OFF power to sprayer, and RELIEVE system pressure** before leaving sprayer unattended.
- **SEE Troubleshooting section of this manual before attempting any repairs**. Wear personal protective equipment and follow safety instructions.

After Spraying

- **CLEAN sprayer immediately after use** according to the directions provided in this manual.
- **DECONTAMINATE yourself after you are** done spraying and have cleaned the sprayer. Wash all exposed areas of the body with soap and water, and remove and launder clothing.
- **DISPOSE OF or STORE remaining chemicals in secure storage with correctly marked container**.

ATV Vehicle Handling Safety

- **DO NOT ALLOW drivers younger than 16** to operate ATV with sprayer attached.
- **EXERCISE SPECIAL CAUTION in ATV vehicle handling and DO NOT exceed 8 kmh.** ATV will be less stable and perform very differently with filled sprayer attached. Exercise particular caution on sloped or rough surfaces to avoid rollover. Use a vehicle equipped with rollover protection for use on non-level terrain.
- **DO NOT RIDE or TRANSPORT cargo on the sprayer.**

Chemical accident procedures

Immediate response is necessary in the event of sprayer leaks, bodily chemical contact, poisoning, or spills. See instructions below:

Sprayer leak	**If the sprayer develops a leak, *immediately stop spraying***. Turn off power to the sprayer and follow directions below, as applicable.
Bodily chemical contact	**Personal contamination can occur when chemicals splash, spill, or spray directly onto a person.** 1. Immediately follow First Aid instructions on chemical label. General procedures can include: a) Eyes – immediately flush with water. b) Skin – wash all contaminated skin surfaces with soap and water. c) Clothing – remove contaminated clothing. Dispose of heavily

Summary of Important Safety Information

	contaminated clothing per chemical label instructions. 2. Seek medical advice if instructed on the label or the victim experiences symptoms of harmful effects. Bring the chemical label for reference.
Poisoning by ingestion or inhalation	**In case of poisoning from ingestion or inhalation**: ***If the victim has collapsed or is not breathing, call 000***. Otherwise: 1. If you are the victim, immediately seek assistance from nearby personnel because you may become incapacitated. 2. Immediately follow first aid instructions on chemical label. 3. Call a poison control center for further advice.
Chemical spills	**Chemical spills must be quickly contained and properly cleaned up.** Refer to the chemical label for any specific clean-up instructions. General procedures include: 1. **Controlling** the spill by stopping the source of the spill. 2. **Containing** the spill so that it does not spread and get into water sources. 3. **Cleaning up** the spill immediately. 4. **Seeking additional advice** from: - *Chemical manufacturer*. See chemical label for contact information.

Warning Label Location

WARNING

READ and UNDERSTAND the Owner's Manual completely before using this sprayer. Assemble, test, and use only in accordance with the Owner's Manual instructions.
READ and FOLLOW chemical label instructions. Pesticides are hazardous chemicals, which must be handled carefully.
KNOW emergency procedures BEFORE handling chemicals. Sprayer leaks, bodily chemical contact, poisoning, and spills require immediate response.
AVOID inhaling, ingesting, or coming into contact with any chemicals.
EXERCISE CAUTION in vehicle handling. Vehicle will be less stable and handle very differently with filled sprayer attached.
DO NOT TURN ON POWER to sprayer until ready to spray in order to avoid unintentional spray release.

Improper use of the sprayer or handling of chemicals could result in serious injury or illness to the operator or nearby persons/animals, or could cause damage to the environment.

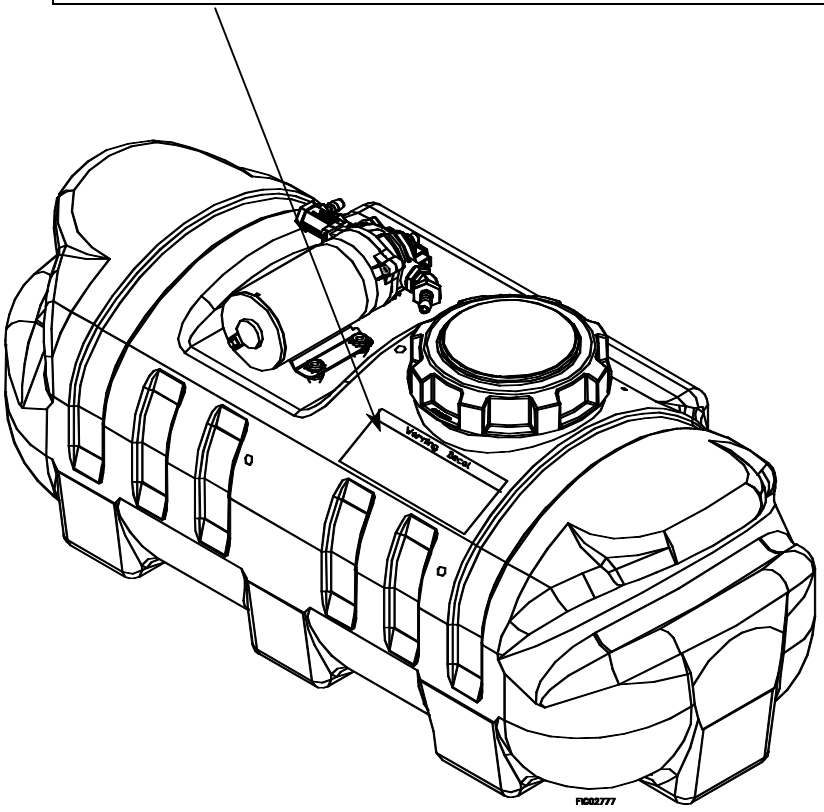

Unpacking

Closely inspect all contents in the shipping carton.

Note that some parts are shipped inside the tank.

- **If you have damaged components:** Contact the freight company that delivered the unit and file a claim.
- **If you have missing components:** Contact Kincrome Tools + Equipment 1300 657 528.

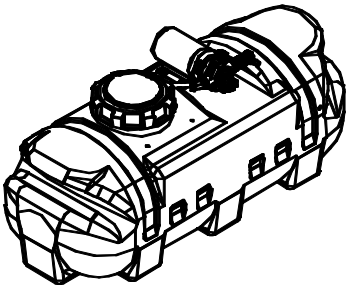

Sprayer

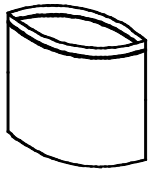

Manual Bag

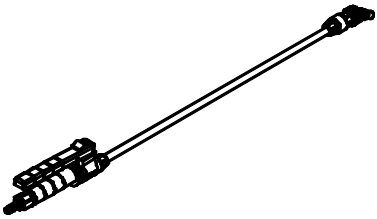

Spray Gun

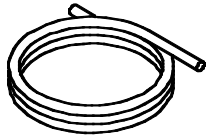

Gun Hose

Unpacking the Manual Bag

The following items are found in the K16000 manual bag.

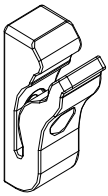

Lance Clip (2)

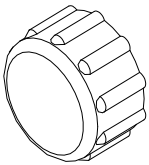

Drain Cap

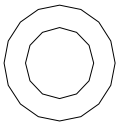

Rubber Washer



Screw (3)

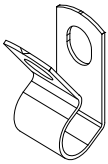

Hose Guide

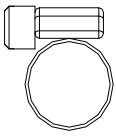

Hose Clamp (2)

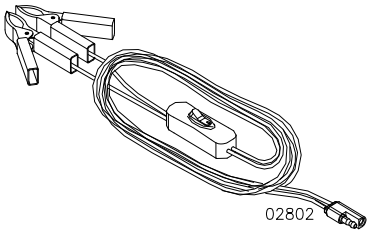

Remote Switch

The following items are found in K16001 and K16002 manual bags.

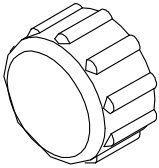

Drain Cap

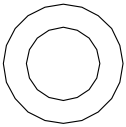

Rubber Washer



Screw (2)

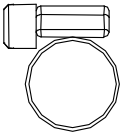

Hose Clamp (2)

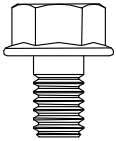

Flange Bolt (1)

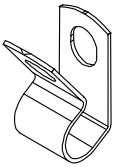

Hose Guide

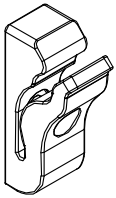

Lance Clip (2)

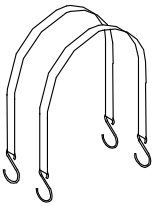

Tie Down Straps (2)

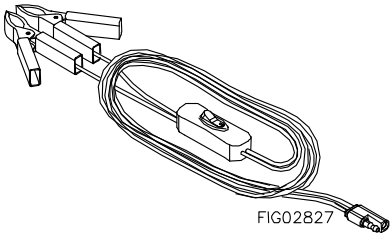

Remote Switch

Assembly

Step One: Attach lance clips to tank

Fasten the two lance clips to the sprayer tank with screws.

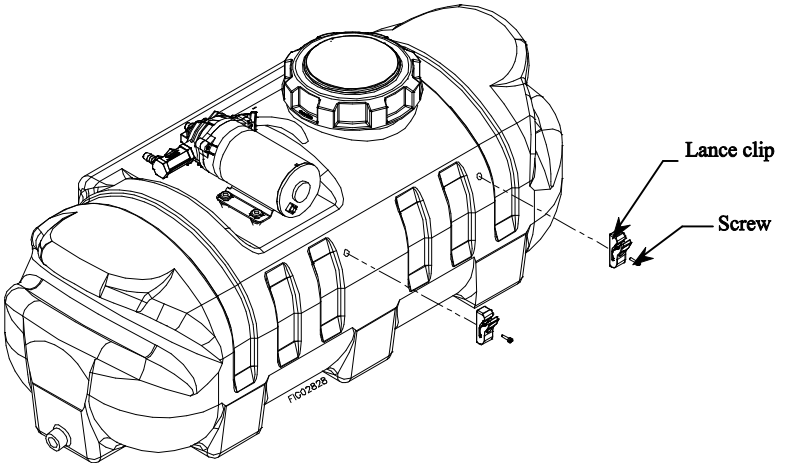

Step Two: Attach drain cap to tank

1. Press the rubber washer into the drain cap with your finger.
2. Thread the drain cap onto the tank.

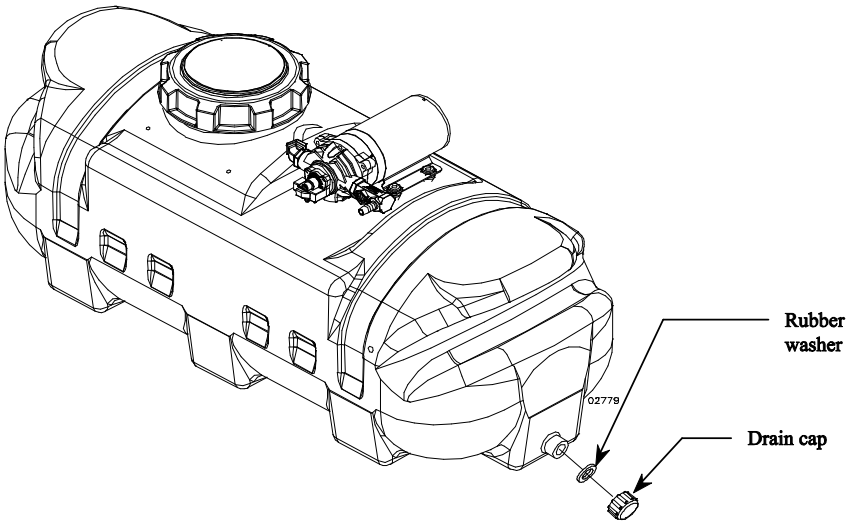

Assembly (continued)

<u>Step Three</u>: Attach gun hose to pump

1. Install hose clamp on hose.
   i) Slide hose clamp over the end of the hose.
   ii) Push the hose onto the hose barb.
   iii) Slide the hose clamp over the hose barb.
   iv) Tighten the hose clamp.
2. Attach one end of the gun hose to the pump hose barb.

Model # K16001, K16002

Model # K16000

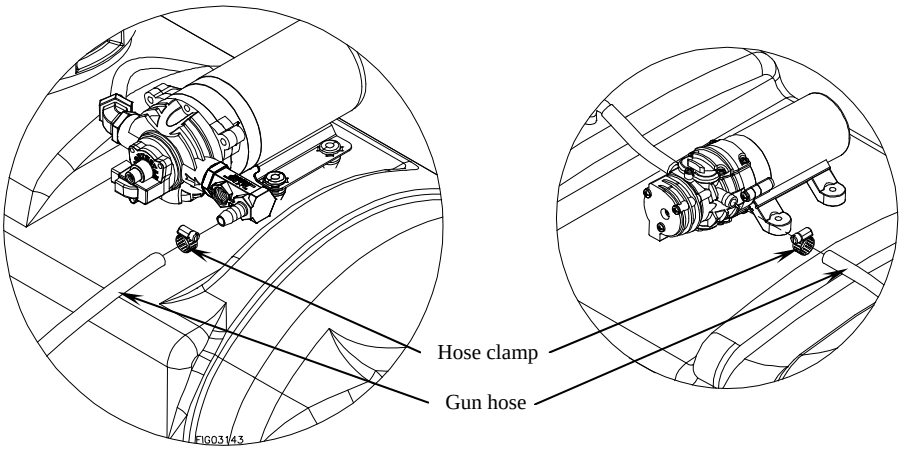

<u>Step Four</u>: Attach hose guide to tank

1. Route gun hose through hose guide.
2. Attach hose guide to tank with bolt.

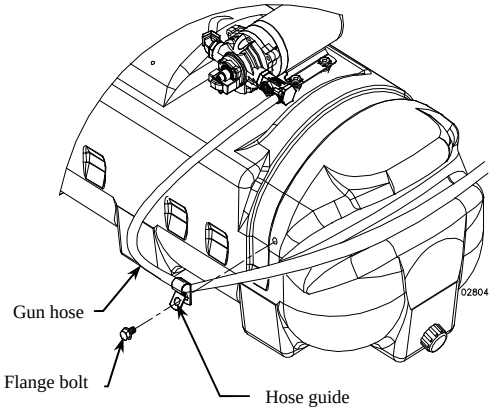

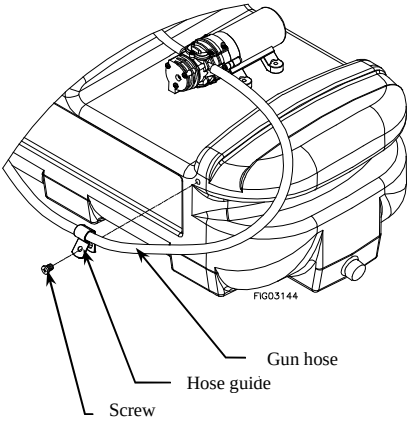

Model # K16001, K16002

Model # K16000

<u>Step Five</u>: Attach gun hose to spray gun

1. Install hose clamp on hose.
    i) Slide hose clamp over the end of the hose.
    ii) Push the hose onto the hose barb.
    iii) Slide the hose clamp over the hose barb.
    iv) Tighten the hose clamp.
2. Attach the end of the gun hose to the gun hose barb.

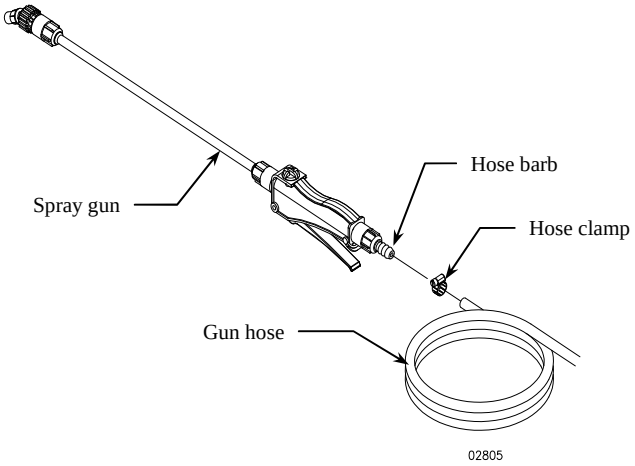

ATTENTION

Model K16000 continue with **Step 9.**
Models K16001 and K16002 continue with **Step 6.**

Assembly (continued)

<u>Step Six</u>: Unpack and inspect parts from K16001 and K16002 kit bag

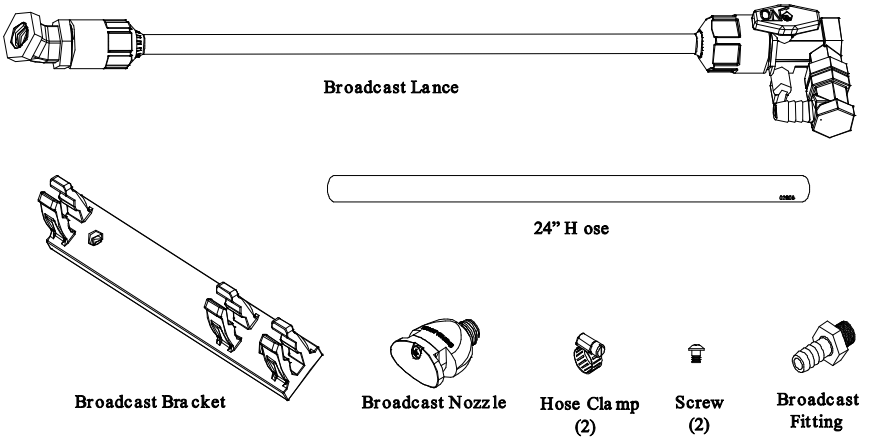

<u>Step Seven</u>: Attach broadcast bracket to tank

Attach broadcast bracket to tank using (2) screws.

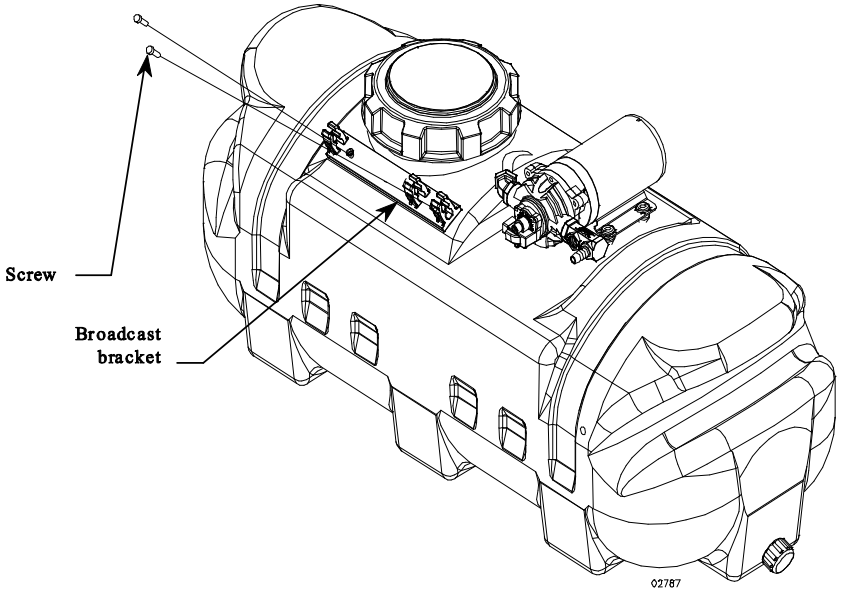

Assembly (continued)

Step Eight: Finish broadcast kit assembly

1. Push broadcast lance into broadcast bracket. Note orientation.
2. Install hose barb into open port on pump. Hand tighten, then one turn with a wrench.
3. Connect 24" hose from pump to broadcast lance using two hose clamps. Follow hose clamp instructions below.
4. Thread broadcast nozzle hand tight onto the end of the lance. Note orientation.

Hose clamp installation instructions:
1. Slide hose clamp over the end of the hose
2. Push the hose onto the hose barb
3. Slide the hose clamp over the hose barb
4. Tighten the hose clamp

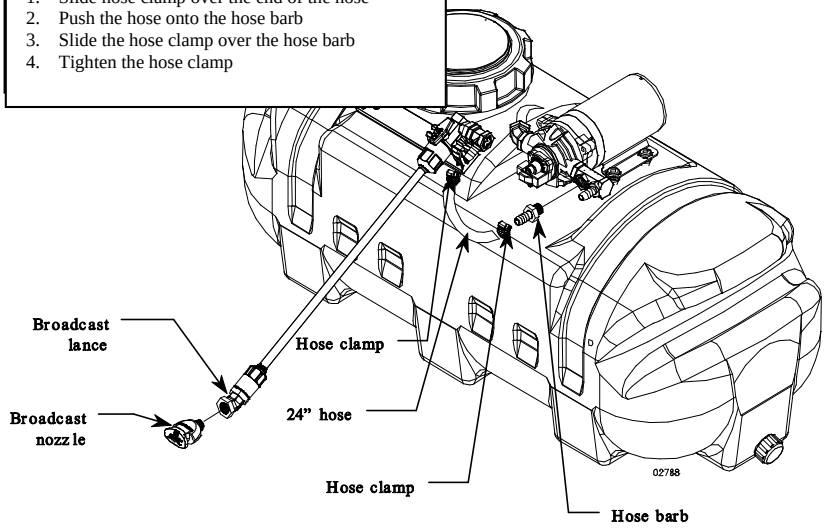

Step Nine: Attach sprayer to vehicle

NOTE: If your vehicle battery will be inaccessible after the sprayer is attached, proceed to "**Step Ten: Connect remote switch to vehicle battery"** prior to performing this step

Secure the sprayer tank to your ATV rack with two tank straps. Note: K16000 sprayer does not include tank straps.

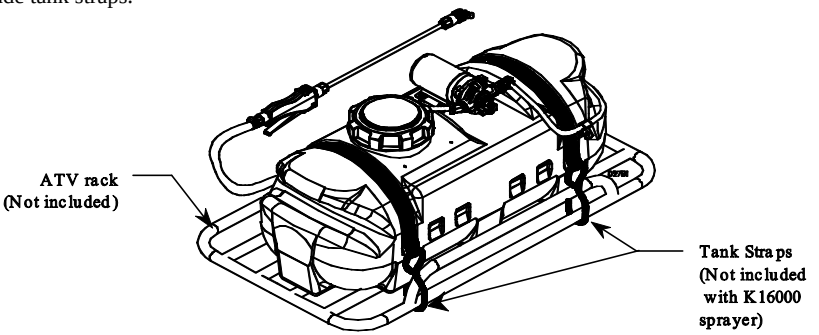

Assembly (continued)

Step Ten: Connect remote switch to vehicle battery

⚠ WARNING

Batteries are hazardous because they contain caustic acid, can emit explosive gases, and can cause electric shock.

Caution must be exercised when making connections to a battery to avoid shock and contact with the acid, and to prevent any sparking that could lead to an explosion.

ALWAYS follow the safety instructions and steps listed below i*n exact sequence* when connecting the sprayer's remote switch to the battery terminals.

1. Preparatory safety	**Preparatory safety steps:** • ALWAYS use eye protection • NEVER smoke or work near sparks or other sources of ignition. • NEVER touch both battery terminals at the same time or with any non-insulated tools. • If battery acid contacts skin or clothing, flush immediately with water and neutralize with baking soda.
2. Connect remote switch to battery	**Connect the sprayer's remote switch to the vehicle battery using the following procedure:** a) Disconnect the vehicle battery ground wire. b) Connect the remote switch's ***red*** battery clamp to the ***positive* (+)** terminal of the battery. c) Connect the remote switch's ***black*** battery clamp to the ***negative* (-)** terminal of the battery. d) Reconnect the vehicle battery ground wire. **WARNING:** Always connect in this sequence to avoid possible shock.
3. Connect remote switch to pump power cord	**Connect the remote switch to the pump power cord:** Note: Make sure the power switch is in the OFF position on the remote switch. 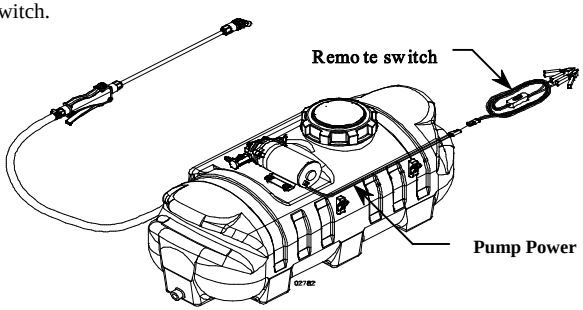
4. Verify connection	**Verify a complete connection has been made** by checking with a DC voltmeter, or by *briefly* turning the remote switch to the ON position and listening for pump activation.
5. Attach sprayer to vehicle if haven't yet	**If you have not yet mounted the sprayer to your vehicle, do so at this time** following the instructions in "**Step Nine: Attach Sprayer to Vehicle"**.

6. Disconnect after use	**AFTER EACH USE, disconnect power to the sprayer** by disconnecting the sprayer's pump cord from the remote switch – *the remote switch may remain connected to the battery.* *NOTE: It is important to disconnect power to the sprayer when not in use for safety reasons. ALWAYS verify that the power has been disconnected or the remote switch is in the OFF position before adding chemicals or servicing.*
7. To disconnect permanently	**When it is necessary to disconnect the sprayer's remote switch from the battery, use the following procedure:** 1. Disconnect sprayer's pump cord from the remote switch. 2. Disconnect the remote switch from the vehicle battery as follows: a) Disconnect vehicle battery ground wire. b) Disconnect the remote switch's *black* battery clamp from the *negative(-)* terminal of the vehicle battery. c) Disconnect the remote switch's *red* battery clamp from the *positive(+)* terminal of the vehicle battery. d) Reconnect the vehicle battery ground wire. **WARNING:** Always disconnect in this sequence to avoid possible shock. *(Remember that on some vehicle models, you may need to remove the sprayer to access the battery)*

Step Eleven: Check and test completed assembly.

⚠ WARNING

Check and test completed assembly

Serious injury could result from chemical leaks if sprayer is improperly assembled or the design of the sprayer is modified.
Follow the steps below to ensure the sprayer is properly assembled. Never modify the sprayer design.

1. Check assembly	**Check assembly to assure the sprayer is properly assembled and in safe working condition:** a) Check that the gun clip screws are tight, hose clamps are secure, and tank straps are properly fastened. b) While it is unlikely that factory-assembled components become loose, they should also be checked to make sure they are tight.
2. Test with water	**Test the system for leaks with water:** a) Fill the tank with water. b) Connect the remote switch to the pump power cord and turn the remote switch ON. The pump is an "on demand" pump. When turned on, the pump will prime itself, then turn off. When the gun trigger is squeezed, the pump will automatically start. c) Operate the spray gun by squeezing the gun trigger. d) Check for leaks throughout the system. If a leak is detected, fix the leak and re-test the system with water until no leaks are detected.

Machine Components (Model # K16000)

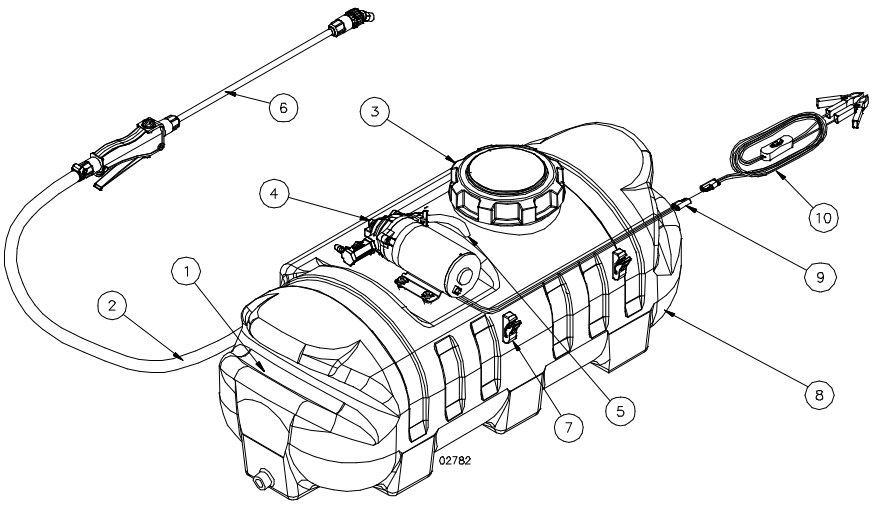

1. **Hose Wrap.** The hose wrap is built into the tank and provides a storage location for the gun hose
2. **Gun Hose.** The 4.5m gun hose transfers chemical from the pump to the spray gun.
3. **Fill Cap.** The fill cap has a vent to allow air to enter the tank as the chemical is dispensed.
4. **Sprayer Pump.** The sprayer pump makes the chemical flow to the spray gun and the nozzle.
5. **Suction Tube.** The suction tube is the inlet line for the pump. The suction tube has a suction strainer to prevent debris from entering the pump.
6. **Spray Gun.** Use the spot spray gun to apply chemical to specific areas. The spray pattern is adjustable from stream to cone by twisting the spray nozzle (see Operation Instructions). When the remote switch is in the ON position, the spray gun trigger is the pump ON/OFF control. Squeeze the trigger and the pump turns on, let go and the pump turns off.
7. **Lance Clips.** Use the gun clips to store the spray gun.
8. **Sprayer Tank.** The sprayer tank holds the chemical.
9. **Pump Power Cord.** The pump power cord connects the sprayer pump to the remote switch. It should be disconnected when the sprayer is not in use.
10. **Remote Switch.** The remote switch connects the battery to the pump power cord and allows the operator to turn the sprayer pump on and off. The remote switch may be left connected to the battery when the sprayer is not in use.

Machine Components (Model # K16001, K16002)

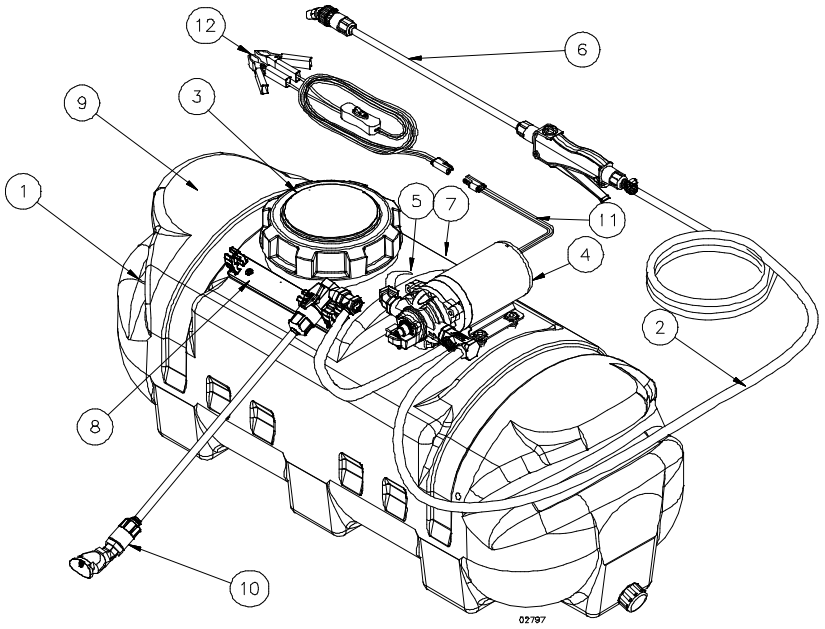

1. **Hose Wrap.** The built-in hose wrap provides a storage location for the gun hose on the tank.
2. **Gun Hose.** The 4.5m gun hose transfers chemical from the pump to the spray gun.
3. **Fill Cap.** The fill cap has a vent to allow air to enter the tank as the chemical is dispensed.
4. **Sprayer Pump.** The sprayer pump makes the chemical flow to the spray gun and the nozzle.
5. **Suction Tube.** The suction tube is the inlet line for the pump. The suction tube has a suction strainer to prevent debris from entering the pump.
6. **Spray Gun.** Use the spot spray gun to apply chemical to specific areas. The spray pattern is adjustable from stream to cone by twisting the spray nozzle (see Operation Instructions). When the remote switch is in the ON position, the spray gun trigger is the pump ON/OFF control. Squeeze the trigger and the pump turns on, let go and the pump turns off.
7. **Lance Clips.** Use the gun clips to store the spray gun.
8. **Broadcast Bracket.** The broadcast bracket holds the broadcast lance for broadcast spraying. The bracket has a storage location for the lance when it is not in use.
9. **Sprayer Tank.** The sprayer tank holds the chemical.
10. **Broadcast Lance.** The broadcast lance sprays a wide pattern to broadcast spray chemical.
11. **Pump Power Cord.** The pump power cord connects the sprayer pump to the remote switch. It should be disconnected when the sprayer is not in use.
12. **Remote Switch.** The remote switch connects the battery to the pump power cord and allows the operator to turn the sprayer pump on and off. The remote switch may be left connected to the battery when the sprayer is not in use.

Operation – Important Safety Information

Now that you have completed and tested your assembly, there is some important safety and health information you need to know with regard to handling and spraying chemicals, as well as vehicle handling with the sprayer attached.

⚠ WARNING

Carefully read and make sure you understand the following safety information before using the sprayer.

General Chemical Safety:

⚠ WARNING

- Pesticides are hazardous chemicals.
- Heed the warnings below and follow all instructions carefully.
- Improper handling of chemicals can result in serious injury or illness, or cause damage to the environment.

- **Chemical label**. ALWAYS READ and FOLLOW all chemical label instructions.
- **Licensing/regulation**. Refer to any applicable licensing restrictions or state/federal regulations with regard to the application of the particular chemical you plan to use.
- **Emergency procedures**. Before handling chemicals, carefully review the "Chemical Accident Procedures" listed later in this section, as well as the "Statement of Practical Treatment" on the chemical label.
- **Inhalation/contact**. ALWAYS take precautions to avoid inhaling or coming into contact with the chemical.
- **Personal protective equipment**. ALWAYS wear protective clothing, eye protection, and chemical-resistant gloves when filling, using and cleaning the sprayer. Wear additional protective gear (such as facemask or apron) as recommended on the chemical label.
- **Children/pets**. Pesticides can be especially toxic to children and animals. ALWAYS exercise extra caution around children. Keep sprayer and all spray materials away from children and animals.
- **Ventilation**. ALWAYS ensure there is adequate ventilation when mixing, pouring, or spraying.
- **Flammables**. NEVER use any flammable chemicals in the sprayer.
- **Corrosives**. DO NOT use corrosive chemicals in the sprayer. They can weaken the sprayer and its parts, resulting in leaks. Check with the chemical manufacturer to ensure chemical is compatible with all components of the sprayer.
- **Chemical interaction**. ALWAYS flush the sprayer before switching chemicals. Different chemicals may interact dangerously with each other.
- **Chemical storage**. ALWAYS store pesticides in a properly labeled container and in a secure location per the manufacturer's recommendations.
- **Health monitoring**. Monitor the health of operators who are frequently exposed to pesticides, as recommended by the chemical label or local/federal regulations.

Chemical Application Safety:

⚠ WARNING

Caution must be used when spraying chemicals to avoid unsafe exposure to humans and the environment.
Heed the warnings below and follow all instructions carefully.

Before Spraying

- **Sprayer prep**. ALWAYS inspect and prepare the sprayer before use according to the directions provided in this manual.
- **Keep sprayer off**. Do not turn on power to the sprayer until ready to spray in order to avoid unintentional spray release.
- **Broadcast nozzle down**. Make sure broadcast nozzle is oriented to spray straight down before starting the sprayer. An incorrectly positioned broadcast nozzle may spray chemicals on you or others
- **Wind speed**. NEVER spray when wind speed exceeds 6.5 kmh in order to minimize spray drift.
- **Clear area/post**. ALWAYS keep the work area clear of people and pets. POST warning notices to restrict access by the public for the period recommended on chemical label.
- **Operator age**. You must be 16 years of age or older to operate this sprayer. Pesticides are especially toxic to children.

During Spraying

- **Over application**. DO NOT over apply pesticide. Apply at a rate recommended by chemical manufacturer. Excess pesticide can be dangerous to humans, damage desirable plants, and contaminate soil and water sources.
- **Never point gun**. NEVER point the spray gun at people or animals.
- **Children/pets**. ALWAYS exercise extra caution when spraying near areas accessible to children and pets.
- **Eating/smoking**. DO NOT eat, drink, smoke, rub your eyes, or touch any part of your bare skin while handling chemicals and spraying.
- **Heat/flames**. DO NOT spray near open flames or sources of heat.
- **Spills**. ALWAYS clean up spills immediately per instructions on the chemical label.
- **Unattended**. ALWAYS turn off vehicle and set brake or block wheels, turn off power to sprayer, and relieve system pressure before leaving sprayer unattended.
- **Troubleshooting**. ALWAYS refer to the safety instructions in the Troubleshooting Section before attempting any repairs.

After Spraying

- **Clean sprayer**. ALWAYS clean the sprayer immediately after use according to the directions provided in this manual.
- **Decontaminate**. ALWAYS decontaminate yourself immediately after you are finished spraying and handling chemicals. Wash all exposed areas of the body with soap and water and remove and launder clothing.
- **Chemical disposal/storage**. ALWAYS dispose of or store remaining chemicals properly as recommended on the chemical label.

ATV Vehicle Handling Safety:

⚠ WARNING

Serious injury can occur if the ATV on which the sprayer is mounted is driven unsafely.

- **Driver age.** You must be 16 years of age or older to operate the ATV with the sprayer attached.
- **Less stable**. Be aware that all vehicle handling will be affected with the filled sprayer attached. See your ATV's warning label for the hazards associated with driving:
  - Too fast
  - On paved surfaces
  - On inclines or rough terrain.
- *These hazards will be increased drastically as a result of the additional weight and location of the filled sprayer*. The center of gravity will be higher and weight distribution different, causing the ATV to be less stable when braking, turning, and driving. Exercise extra caution in vehicle handling. Use particular caution on sloped or rough surfaces in order to prevent rollover. A vehicle equipped with Roll Over Protection System (ROPS) is recommended if you will be operating on non-level terrain.
- **Speed limit**. DO NOT exceed 8 kmh with sprayer mounted on ATV.
- **Ride/transport**. NEVER ride or transport cargo on the sprayer.

Chemical accident procedures:

⚠ WARNING

Before you fill the sprayer, review the following information with regard to handling accidents.

Chemical spills, sprayer leaks, personal contamination, and poisoning are accident situations which you may encounter. **All require an immediate response – See instructions below.**

Sprayer leak	**In the event that the sprayer develops a leak while spraying chemicals, you must *immediately stop spraying*.** Turn off power to the sprayer and follow the directions below, as applicable.
Bodily chemical contact	**Personal contamination can occur when chemicals splash, spill, or spray directly onto a person.** 1. Follow the emergency first aid instructions on the chemical label listed in the "First Aid" or "Statements of Practical Treatment" section. General procedures include: a) Eyes – immediately flush with water or follow other directions as specified on the chemical label. b) Skin – immediately wash all contaminated skin surfaces with soap and water, or follow directions as specified on the chemical label. c) Clothing – remove contaminated clothing immediately. Dispose of heavily contaminated clothing per the instructions on the chemical label for safe chemical/container disposal.

	2. Seek medical advice if instructed on the label, or if the victim experiences symptoms of harmful effects such as burning, swelling, nausea, chest pain, difficulty breathing, dizziness or confusion. When seeking medical advice, be sure to bring the chemical product label.
Poisoning by ingestion or inhalation	**In case of poisoning from ingestion or inhalation**: IF THE VICTIM HAS COLLAPSED OR IS NOT BREATHING, ***CALL 000***. Otherwise: 1. If you are the victim, immediately seek assistance from nearby personnel because you may become incapacitated. 2. Follow the emergency first aid instructions on the chemical label in the "First Aid" or "Statement of Practical Treatment" section. 3. Call a poison control center for further advice.
Chemical spills	**Chemical spills must be quickly contained and properly cleaned up.** Refer to the chemical label for any specific clean-up instructions with regard to the chemical spilled. General procedures include: 1. **Control** the spill by stopping the source of the spill. If the source of the spill is a container leak, place the leaking container in a larger, watertight container. Keep unprotected people away from the spill site. 2. **Contain** the spill so that it does not spread and get into water sources. Use a shovel or other tool to make a dike around the spill with soil, sod, or absorbent material. 3. **Clean up** the spill immediately -- Absorbent materials like ground corncobs or pet litter should be spread on the spill area to soak up the pesticide. The contaminated material should then shoveled into a leak proof container. Do not flush the spill area with water until you receive advice as directed below. 4. **Seek additional advice** from the chemical manufacturer and your state's pesticide regulatory agency regarding decontamination of the spill site: - *Chemical manufacturer*. The chemical label provides contact information for the chemical manufacturer.

Operation – Preparing the Sprayer for Each Use

If the sprayer has been used previously, it must be prepared BEFORE EACH SUBSEQUENT USE.

⚠ WARNING

Read instructions below carefully for inspecting and preparing the sprayer.
Damaged or clogged equipment could result in leaks or uncontrolled spray.
Leaks could result in injury to the operator or bystanders from chemical exposure, or cause damage to the environment.

Important safety rules:

- **Power off.** Make sure all power is OFF before cleaning, inspecting, or servicing the sprayer.
- **Guards / shields.** Make sure all guards and shields are replaced after servicing the sprayer.
- **Replacement parts.** If a part needs replacement, only use parts that meet the manufacturer's specifications. Replacement parts that do not meet specifications may result in a safety hazard or poor operation of the sprayer.

1. Ensure sprayer attached	**Ensure the sprayer is securely attached to the vehicle.**
2. Ensure tank empty	**Ensure the sprayer has been thoroughly flushed and drained of all residual chemical from prior uses.**
3. Clean suction strainer	**Clean the suction strainer of any chemical residue.** It is important to clean the suction strainer before each use to ensure it is not clogged and to prevent residual chemical from contaminating sprayer contents. **IMPORTANT:** The strainer must be accessed by reaching into the tank, so the *tank must be empty* to avoid immersing your hand in chemicals. a) Open fill cap on top of tank b) USING RUBBER GLOVES, reach into the tank and pull the suction strainer off the end of the suction tube. (See figure below.) c) Run the suction strainer under fresh water to remove debris. d) Replace the suction strainer onto the end of the suction tube. 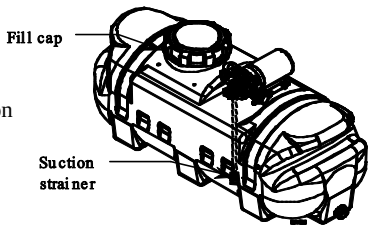
4. Inspect & repair	**Inspect and test the sprayer thoroughly**: e) Inspect hoses for exposed mesh and holes. Replace all worn or damaged hoses. f) Inspect tank and fittings for cracks and leaks. Replace all damaged fittings with original Kincrome parts. g) Check to be sure retaining nut on gun nozzle is tight. h) Check to be sure all other nuts, bolts, and screws are tight. i) Check wheels and tires, if equipped. Make sure wheel lugs are tight and tires are inflated. j) *Partially fill tank with plain water and spray to test for leaks*. Repair as needed. ***IMPORTANT: After any repair work has been done, ALWAYS test for leaks with water one final time before using.***

Operation – Using the Sprayer

Step One: Assess wind conditions and clear work area.

Before you decide to spray, you must determine whether wind conditions are suitable. You must also restrict access to the work area to ensure the safety of bystanders.

⚠ WARNING

Do not spray if wind speeds are greater than 6.5 kmh or if there are bystanders in the intended spray area.

1. Assess wind speed	**Assess weather conditions to ensure that it is not too windy to spray.** **DO NOT SPRAY if wind speeds are greater than 6.5 kmh.** *Visible indication of wind speed*: If leaves are in constant motion or there is any branch movement, DO NOT spray because the wind is too strong.
2. Clear work area	**Clear the work area of all bystanders and pets.** Restrict access by the public for the period recommended on chemical label.

Step Two: Fill the sprayer.

⚠ WARNING

ALWAYS wear personal protective equipment as directed on the chemical label when handling pesticides.
Long pants and sleeves, chemical resistant gloves, and eye protection are strongly recommended.
Additional protective gear may be required depending on the particular pesticide.

Fill the sprayer using the following steps:

1. Review safety information	**Review the "Operation – Important Safety Information"** related to General Chemical Safety and Chemical Accident Procedures provided in this manual.
2. Choose safe mixing/ loading area	**Choose a safe pesticide mixing and loading area.** - Choose an outdoor, well-ventilated area away from unprotected people, animals, food, and other items that might become contaminated.
3. Wear personal protective equipment	**Wear personal protective equipment as directed on the chemical label.** - Note that additional equipment may be specified for mixing and loading activities.
4. Turn off sprayer and vehicle	**Turn OFF power to the sprayer before filling.** - The vehicle should also be off, with brake set or wheels blocked to prevent unintended movement.
5. Remove fill cap	**Remove the fill cap located on top of the sprayer.** 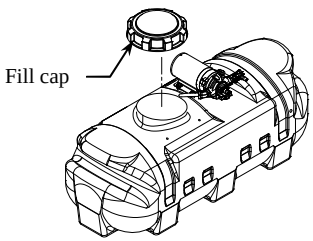

Operation – Using the Sprayer (continued)

6. Ensure tank flushed	**Ensure tank is flushed of all chemicals from prior uses**. - Chemicals can interact dangerously when mixed, and residue chemicals are also a health hazard.
7. Check drain cap	**Before filling tank, ensure drain cap is securely tightened.** 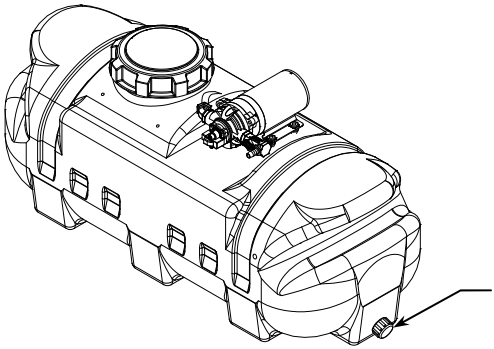
8. Fill tank	**Add pesticide to tank through fill cap:** 1. Confirm the chemical/water dilution ratios specified on the chemical label. 2. Determine chemical and water volumes needed for the planned application, taking into consideration that maximum tank capacity is 38 litre for item K16000. 60 litre for K16001 and 98 litre for K16002. *<u>Note</u>: Only purchase and mix as much chemical as you need for the planned application in order to minimize chemical over application and the need for storing unused chemicals.* 3. Add chemical to the tank through the fill cap. *If the chemical is not pre-mixed, add water and pesticide concentrate in the order prescribed on the label.* 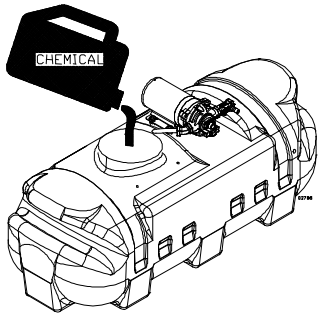
9. Ensure chemical mixed	**Ensure chemical is thoroughly mixed in tank.** - Stirring device should be made of metal or plastic, non-chemical absorbing material, and then properly cleaned and stored after use.
10.Replace fill cap	**Replace fill cap and tighten securely**.

ATTENTION

Spot Sprayer Models continue with **Step 3.1.**
Broadcast Sparyer Models continue with **Step 3.2.**

Step 3.1: Operate the spot sprayer.

⚠ WARNING

ALWAYS wear personal protective equipment as directed on the chemical label when spraying.

Long pants and sleeves, chemical-resistant gloves, and eye protection are strongly recommended. Additional protective gear may be required depending on the particular pesticide.

1. Review safety information	**Review the "Operation – Important Safety Information"** related to Chemical Application Safety and ATV Vehicle Handling Safety provided in this manual.
2. Wear personal protective equipment	**Wear personal protective equipment as directed on the chemical label.**
3. Turn on power	**Turn on the power to the sprayer.** 1. Verify the remote switch is connected to the pump power cord. 2. Turn the remote switch to the "ON" position. *Note: The pump will start automatically when power is turned on. The pump will cycle on and off as needed to retain pressure in the hose.*
4. Begin agitation if needed	**Some formulations of liquid pesticides do not remain in solution and should be agitated to maintain a uniform mix.** **Contact Kincrome Tools + Equipment 1300 657 528 for any questions about the appropriate use of the sprayer and/or optional accessories.**

5. Squeeze trigger & adjust nozzle	**To spray, squeeze the gun trigger**. **- Twist the spray nozzle to adjust from a straight stream to hollow cone spray pattern**, as recommended on the chemical label for proper delivery rate. *Note: It is not unusual for the operator to be exposed to chemical drips while adjusting the nozzle – gloves should be chemical resistant.* 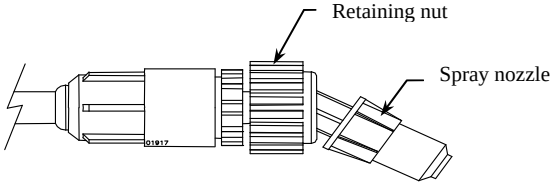
6. Leaving unattended	**If the sprayer must be left unattended at any time**: a) Disconnect power to the sprayer. b) Relieve system pressure by depressing the gun trigger. c) Turn off the vehicle. Set brake or block the wheels.
7. Discontinue use if clogged or inoperative	**If the sprayer becomes clogged or inoperative during use, *discontinue use immediately*.** - DO NOT attempt to service while chemicals are in the sprayer and power is connected. - Return to service area to review instructions for troubleshooting before attempting to service.

Note: *A reserve, clean container capable of holding at least 38 litres – model K16000, 60 litres – model K16001, 98 litres – model K16002 should be kept for use when the sprayer tank needs to be emptied temporarily for repairs*

Step 3.2: Operate the broadcast sprayer. (Models K16001 and K16002)

⚠ WARNING

ALWAYS wear personal protective equipment as directed on the chemical label when spraying.

Long pants and sleeves, chemical-resistant gloves, and eye protection are strongly recommended. Additional protective gear may be required depending on the particular pesticide.

1. Review safety information	**Review the "Operation – Important Safety Information"** related to Chemical Application Safety and ATV Vehicle Handling Safety provided in this manual.
2. Wear personal protective equipment	**Wear personal protective equipment as directed on the chemical label.**

Operation – Using the Sprayer (continued)

3. Close broadcast valve	**Turn the broadcast nozzle to the off position.** 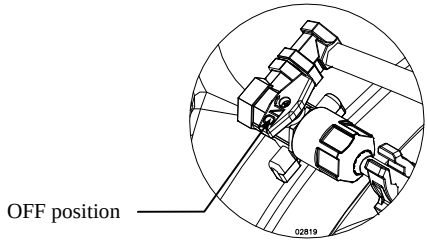
4. Turn on power	**Turn on the power to the sprayer.** 1.Verify the remote switch is connected to the pump power cord. 2.Turn the remote switch to the "ON" position. *<u>Note</u>: The pump will start automatically when power is turned on. The pump will cycle on and off as needed to retain pressure in the hose.*
5. Begin agitation if needed	**Some formulations of liquid pesticides do not remain in solution and should be agitated to maintain a uniform mix.** **Contact Kincrome Tools + Equipment 1300 657 528 for any questions about the appropriate use of the sprayer and/or optional accessories.**
6. Squeeze trigger & adjust nozzle	**To spray, squeeze the gun trigger**. **- Twist the spray nozzle to adjust from a straight stream to hollow cone spray pattern**, as recommended on the chemical label for proper delivery rate. *Note: It is not unusual for the operator to be exposed to chemical drips while adjusting the nozzle – wear chemical resistant gloves.* 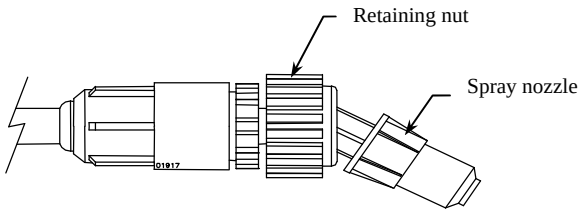

7. Operate broadcast spraying system

A. Move broadcast lance into the broadcast position

Ensure power to the pump is off, then lift the broadcast lance out of its stored position and click the lance into its broadcast position.

Stored position

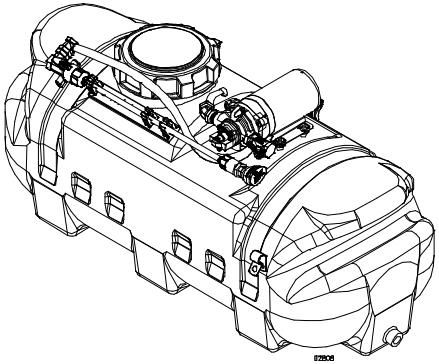

Broadcast position

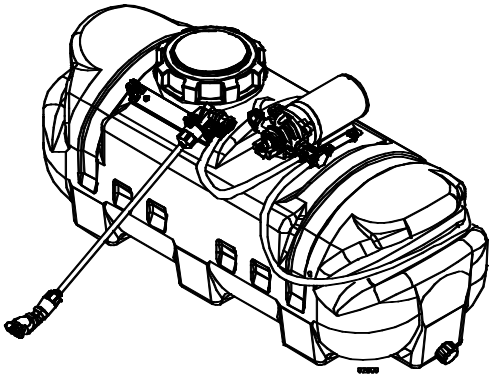

B. Locate broadcast lance valve

Ensure the valve is in the off position.

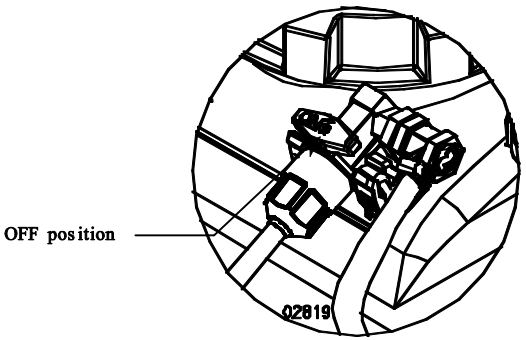

C. Ensure correct spray pattern

Rotate the broadcast nozzle, if needed, so that the spray pattern is pointed down evenly distributed.

Note: It is not unusual for the operator to be exposed to chemical drips while adjusting the broadcast nozzle. Wear chemical resistant gloves.

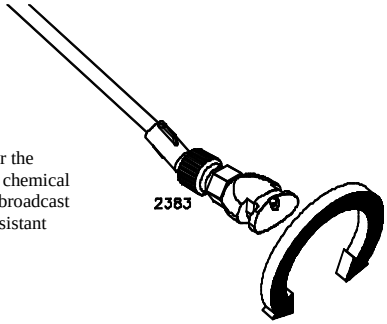

D. Begin to spray

Turn the power ON, turn broadcast lance valve to the on position.

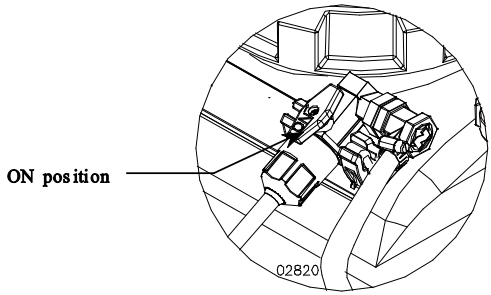

E. Ensure uniform coverage

To ensure proper coverage, overlap the ends of the spray pattern 300mm. Use tables in Appendix A to determine what speed to drive your vehicle for the desired application rate.

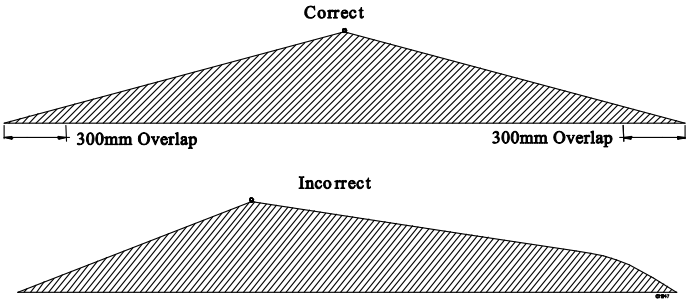

IMPORTANT: Make sure broadcast nozzle is oriented to spray straight down before you start. An incorrectly positioned broadcast nozzle may spray chemicals on you or others.

Operation – Using the Sprayer (continued)

NOTE!!	**Broadcast lance and spot spray gun can be used simultaneously. Use the spot spray gun if you desire to apply pesticide only on selected plants. Use the broadcast nozzle if you wish to spray large ground areas.**
7. Leaving unattended	**If the sprayer must be left unattended at any time**: d) Disconnect power to the sprayer. e) Relieve system pressure by depressing the gun trigger. f) Turn off the vehicle. Set brake or block the wheels.
8. Discontinue use if clogged or inoperative	**If the sprayer becomes clogged or inoperative during use, *discontinue use immediately*.** - DO NOT attempt to service while chemicals are in the sprayer and power is connected. - Return to service area to review instructions for troubleshooting before attempting to service.

Note: *A reserve, clean container capable of holding at least 38 litre (model K16000), 60 litre (model K16001), 98 litre (model K16002) should be kept for use when the sprayer tank needs to be emptied temporarily for repairs.*

The container should be properly labeled as to its contents if it is used.

Operation – Using the Sprayer (continued)

Step Four: Clean sprayer and decontaminate after use.

When done using the sprayer, it is important to clean the sprayer and decontaminate yourself. Do not store the sprayer with chemicals in the tank, as it is unsafe and could also result in damage to the equipment.

⚠ WARNING

Clean up and decontamination procedures must be followed after each use.

Improper equipment clean up and disposal of chemicals can result in dangerous chemical exposure to humans and the environment, as well as equipment damage.

Personal decontamination is required after spraying to minimize unsafe exposure to chemicals and potential illness.

1. Drain tank	**If there is excess pesticide left in the tank, drain the tank:** a) Disconnect power to the sprayer and relieve system pressure by depressing the gun trigger. b) Find a suitable container in which to drain the unused pesticide. Place it under the tank drain hole. c) While wearing rubber gloves, eye protection, and all other required personal protective equipment, remove the drain cap and allow pesticide to drain into container. d) When tank stops draining, replace drain cap. Tighten securely.
2. Unused chemical	**Properly store or dispose of unused chemical:** a) <u>If the unused pesticide is to be stored for future use</u>: Store all unused pesticide in its original, or a suitably marked, container in a secure location out of the reach of children & animals. b) <u>If remaining pesticide is to be disposed</u>: Properly dispose of the remaining chemical and its container per the chemical manufacturer's recommendation and according to local hazardous waste disposal regulations.
3. Flush sprayer	**Flush the sprayer per the chemical manufacturer's recommendations.** A general procedure is as follows: a) Add fresh water to the tank. b) Reconnect power to the sprayer. c) Operate the spray gun and discharge all rinse water onto an area that can accept dilute pesticide application. d) Add 18 litres of the chemical manufacturer's recommended cleaning solution. Operate the spray gun, collecting the discharged solution if recommended by the manufacturer. e) After flushing, disconnect power to the sprayer and be sure all system pressure is relieved by squeezing the gun trigger. f) Dispose of cleaning solution discharge as recommended by the manufacturer of the solution.
4. Decontaminate & launder	**Decontaminate yourself after you are finished handling chemicals:** a) Remove all clothing worn during spraying and chemical handling. b) Wash all exposed parts of the body with soap and water. c) Launder clothing separately from other wash.

Storage

Prepare the sprayer for end-of-season storage by running antifreeze through the system. This will keep internal parts lubricated, protect against corrosion, and keep the unit from freezing.

CAUTION
The sprayer will be damaged if it freezes. Protect the sprayer from freezing during storage by following the instructions below.

Preparing for storage:

1. Add antifreeze	Pour 4 litre of antifreeze into the tank.
2. Spray briefly	Turn on the pump motor and squeeze the gun trigger briefly until fluid sprays. Store gun in lance clips. If equipped, store broadcast lance in stored position to prevent damage.

Removing from storage:

1. Drain	Drain the antifreeze left in the tank through the tank drain hole into a suitable container.
2. Flush with water	Fill the tank with fresh water and run through the system. Operate the spray gun until the system is completely flushed. Be sure to set up containers to capture the antifreeze flush water.
3. Disposal	Dispose of the antifreeze and flush water properly.

Troubleshooting

⚠ WARNING

Before troubleshooting or attempting to service, read the following safety rules to avoid accidental exposure to chemical and also risk of electric shock.

Note: *A reserve, clean container capable of holding at least 38 litres (model K16000), 60litres (model K16001), 98 litres (model K16002) should be kept for use when the sprayer tank needs to be emptied temporarily for repairs*

The container should be properly labeled as to its contents if it is used.

Before attempting to service the sprayer:

1. Personal protective equipment	**Wear personal protective equipment as directed on the chemical label while servicing your sprayer.**
2. Review troubleshooting table	**Review the Troubleshooting Table below for the type of problem you are experiencing.** However, DO NOT attempt to repair until the steps listed below are followed.
3. Empty and flush	**If the cause listed for your problem is Clogged intake tube, Clogged suction strainer, or Worn spray gun nozzle:** empty the tank and flush the sprayer with water as directed in the section, "Operation – Step Four". *- In order to avoid accidental exposure to chemicals, never attempt to unclog the intake tube or suction strainer, or service the spray gun nozzle, until the tank has been emptied and the sprayer flushed with water.*
4. Disconnect power/relieve pressure	**Disconnect power to the sprayer and be sure all system pressure is relieved by squeezing the gun trigger.**
5. Perform repairs	**Follow the directions provided in the troubleshooting table to repair the sprayer.** *NOTE: Never try to unclog the sprayer nozzle by blowing through it.*
6. Test after servicing	**After servicing, ALWAYS test the sprayer for leaks with plain water before using.**

PROBLEM	CAUSE	SOLUTION
Pump will not turn on	Bad electrical connection	Check battery connections
	Short in wires	Check condition of wires
	Low voltage	Check voltage
Low pressure	Worn spray gun nozzle	Replace spray gun
	Worn boom nozzle	Replace boom nozzle
Low flow	Clogged intake tube	Remove obstruction
	Clogged suction strainer	Clean suction strainer
	Low voltage	Check voltage
Poor spray distribution	Clogged intake tube	Remove obstruction
	Suction strainer clogged	Clean suction strainer
	Worn spray gun nozzle	Replace spray gun
Pump cycles while not spraying	Leak in the system	Tighten leaking hose clamps or fittings, replace spray gun

Specifications

Electrical System Requirements	
Electrical connection……	12 VDC
Amp draw from pump	
Models #	
K16001, K16002…….	7.5 Amps (max)
Model # K16000……..	4.0 Amps (max)
Sprayer Specifications	
Maximum GPM	
Models #	
K16001, K16002…….	2.2 GPM (8.3 Liters/min.)
Model # K16000……...	1.0 GPM (3.8 Liters/min.)
Maximum Pressure	
Models #	
K16001, K16002…….	70 PSI (4.8 Bar)
Model # K16000……...	40 PSI (2.76 Bar)
Tank Maximum Capacity	
Models # K16000……	38 Litres
Models # K16001……..……..…	60 Litres
Models # K16002……..……..	98 Litres
Overall Dimensions	L x W x H
Models # K16000……	71.1cm x 30.5cm x 27.9cm
Models # K16001……..……..…	86.4cm x 36.8cm x 52.1cm
Models # K16002…….... ……	86.4cm x 36.8cm x 62.2cm
Dry Weight / Weight full of water	
Models # K16000……	4 kg./41 kg.
Models # K16001……..……..…	8.3 kg./68.3 kg.
Models # K16002……..……..…	9.9 kg./108 kg.
Broadcast Nozzle Specifications	
Spray Width – K16001, K16002	488 cm
Spray Overlap – K16001, K16002	30 cm
Component Materials*	
Tank.....…….……	Polyethylene, EPDM
Suction Tube.....…….……	Polypropylene, PVC, Stainless Steel
Hose.....…….……	PVC
Pump.....…….	Polypropylene, Viton®, Santoprene®, Stainless Steel
Valves.....……..	PVC, Buna-N
Gun and Nozzle..……..	Nylon, Polyacetal, Aluminum

* Before using any chemical, check to ensure the chemical is compatible with all materials in the system.

The manufacturer reserves the right to make improvements in design and/or changes in specifications at any time without incurring any obligation to install them on units previously sold.

Any Questions, Comments or Parts Orders

Call Kincrome Tools + Equipment 1300 657 528

Exploded View – K16000 / K16001 / K16002 – Rev D

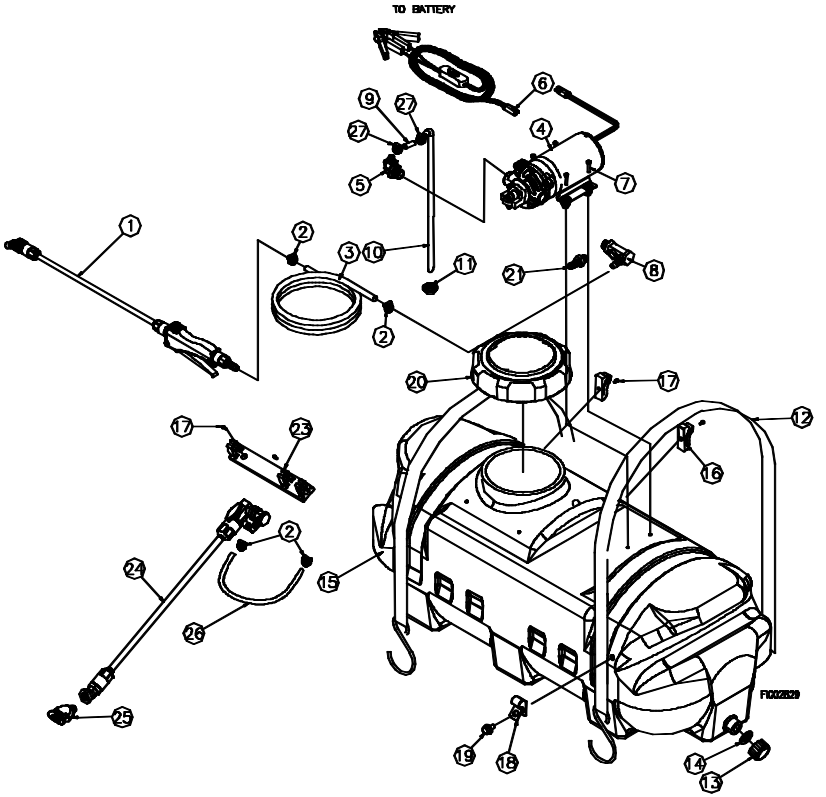

Item	Part#	Description	Model	Qty
1	K16000-1	Spray gun	All	1
2	K16000-2	Hose clamp	K16000	2
			K16001, K16002	4
3	K16000-3	Gun hose	All	1
4	K16000-4	Sprayer pump	K16000	1
	K16001-1	Sprayer pump	K16001, K16002	1
5	K16001-2	Inlet fitting	K16001, K16002	1
6	K16000-5	Remote switch	All	1
7	K16000-6	M5 x 15 mm	K16000	4
	K16001-3	#10 x 1" Screw	K16001, K16002	4
8	K16001-4	Outlet fitting	K16001, K16002	1
9	K16000-7	Suction hose	K16000	1
	K16001-5	Suction hose	K16001, K16002	1
10	K16000-8	Suction tube	K16000	1
	K16001-6	Suction tube	K16001, K16002	
	K16001-7	Suction tube		
11	K16000-9	Suction strainer	K16000	1
	K16001-8	Suction strainer	K16001, K16002	1
12	K16001-9	Tank straps	K16001, K16002	2

Item	Part#	Description	Model	Qty
13	K16000-10	Drain cap	All	1
14		Gasket		1
15	K16000-11	38 Litre Tank	K16000	1
16	K16001-10	60 Litre Tank	K16001	1
	K16001-11	98 Litre Tank	K16002	1
	K16000-12	Lance clip	All	2
17	K16000-13	M5 screw	K16000	2
18	K16001-12	#10-24 x 1/2" Screw	K16001, K16002	4
	K16000-14	Hose guide	K16000	1
19	K16001-13	Hose guide	K16001, K16002	1
	K16001-13 K16000-13	Hose guide M5 Screw	K16001, K16002 K16000	1 1
20	K16001-14	5/16-18 x 1/2" Bolt	K16001, K16002	1
	K16000-16	Tank Lid	All	1
21	K16001-15	Broadcast fitting	K16001, K16002	1
23	K16001-16	Broadcast bracket	K16001, K16002	1
24	K16001-17	Broadcast lance	K16001, K16002	1
25	K16001-18	Broadcast nozzle	K16001, K16002	1
26	K16001-19	Broadcast hose	K16001, K16002	1
27	K16000-2	Hose clamp	K16000	2
27	K16001-20	Hose clamp	K16001, K16002	2

Appendix A – Broadcast Spray Calibration Tables
Models K16001 & K16002

Below are some guidelines to help you calibrate your broadcast sprayer. This is a very important step in operating the broadcast sprayer such that too much or too little chemical may be applied.

1. Using **Table 1**, find a table that corresponds with the chemical manufacturer's suggested application rate (litres per hectare, litres per 100 sq.m or litres per 10 sq.m).
2. Find the application rate that is closest to the chemical manufacturer's recommendations.
3. The speed to drive your ATV is listed below the application rates**.**

TABLE 1

Litres per Hectare (based on 91cm spraying height and 4m spray pattern)							
Application Rate	800	400	267	200	160	133	144
Speed To Drive	1 KM/H	2 KM/H	3 KM/H	4 KM/H	5 KM/H	6 KM/H	7 KM/H

Litres per 100 Sq.m. (based on 91cm spraying height and 4m spray pattern)							
Application Rate	8.0	4.0	2.6	2.0	1.6	1.3	1.1
Speed To Drive	1 KM/H	2 KM/H	3 KM/H	4 KM/H	5 KM/H	6 KM/H	7 KM/H

Litres per 10 Sq.m. (based on 91cm spraying height and 4m spray pattern)							
Application Rate	.80	.40	.26	.20	.16	.13	.11
Speed To Drive	1 KM/H	2 KM/H	3 KM/H	4 KM/H	5 KM/H	6 KM/H	7 KM/H

4. Use **Table 2** to choose the throttle setting on your ATV.

TABLE 2

Speed	**Time required in seconds to travel a distance of:**		
(KM/H)	**10 m.**	**50 m.**	**100 m.**
1	36	180	360
2	18	90	180
3	12	60	120
4	9	45	90
5	7	35	70
6	6	30	60
7	5	25	50

5. The coverage area can be found by dividing tank size by the application rate.
   Example: 98 litres divided by 200 litres/hectare = .49 hectare of coverage per tank.

Limited Warranty

Dear Valued Customer:

The Kincrome Product you just purchased is built with the finest material and craftsmanship. Use this product properly and enjoy the benefits from its high performance. By purchasing a Kincrome product, you show a desire for quality and durability.

Like all mechanical equipment this unit requires a due amount of care. Treat this unit like the high quality piece of machinery it is. Neglect and improper handling may impair its performance. Please thoroughly read the instructions and understand the operation before using your product.

Limited Warranty

Kincrome shall warranty any piece of equipment manufactured, or parts of equipment manufactured, to be free from defects in material or workmanship for a period of 1 year from the date of purchase by user. This warranty applies to the original purchaser of the equipment and is non transferable. Verification of purchase is the responsibility of the buyer. Parts will be replaced or repaired at no charge, except when the equipment has failed due to lack of proper maintenance. Any misuse, abuse, alteration or improper installation or operations will void warranty. Determining whether a part is to be replaced or repaired is the sole decision of Kincrome.

NOTE: Some services performed by parties other than Kincrome may void warranty.

This warranty covers parts only. It will not provide for replacement of complete products due to defective parts. Components not manufactured by Kincrome such as engines are guaranteed by their manufacturer and can be serviced at factory-authorized locations near you. Any costs incurred due to replacement or repair of items outside of a Kincrome approved facility is the responsibility of the buyer and not covered under warranty. Kincrome can supply you with the service center location in your area.

This warranty specifically excludes the following; failure of parts due to damage caused by accident, fire, flood, windstorm, acts of God, applications not approved by Kincrome in writing, corrosion caused by chemicals, use of replacement parts which do not conform to manufacturer's specifications, and damage caused by vandalism. Additional exclusions: loss of running time, inconvenience, loss of income, or loss of use, including any implied warranty of merchantability of fitness for a specific use.

Warranty does not cover items subject to normal wear such as tires, receptacles or any part subject to direct physical contact by the public. This warranty does not cover any personal injury or damage to surrounding property caused by failure of any part.

This warranty is in lieu of any other warranty expressed or implied and Kincrome assumes no other responsibility or liability outside that expressed within this warranty.

KINCROME
TOOLS + EQUIPMENT™

Distributed by
Kincrome Tools + Equipment
3 Lakeview Drive, Caribbean Business Park,
Scoresby, Vic 3179 Australia
www.kincrome.com.au