KINCROMEC®
PROFESSIONAL QUALITY TOOLS

KARBON KREEPER
SUPER LOW PROFILE
K8112

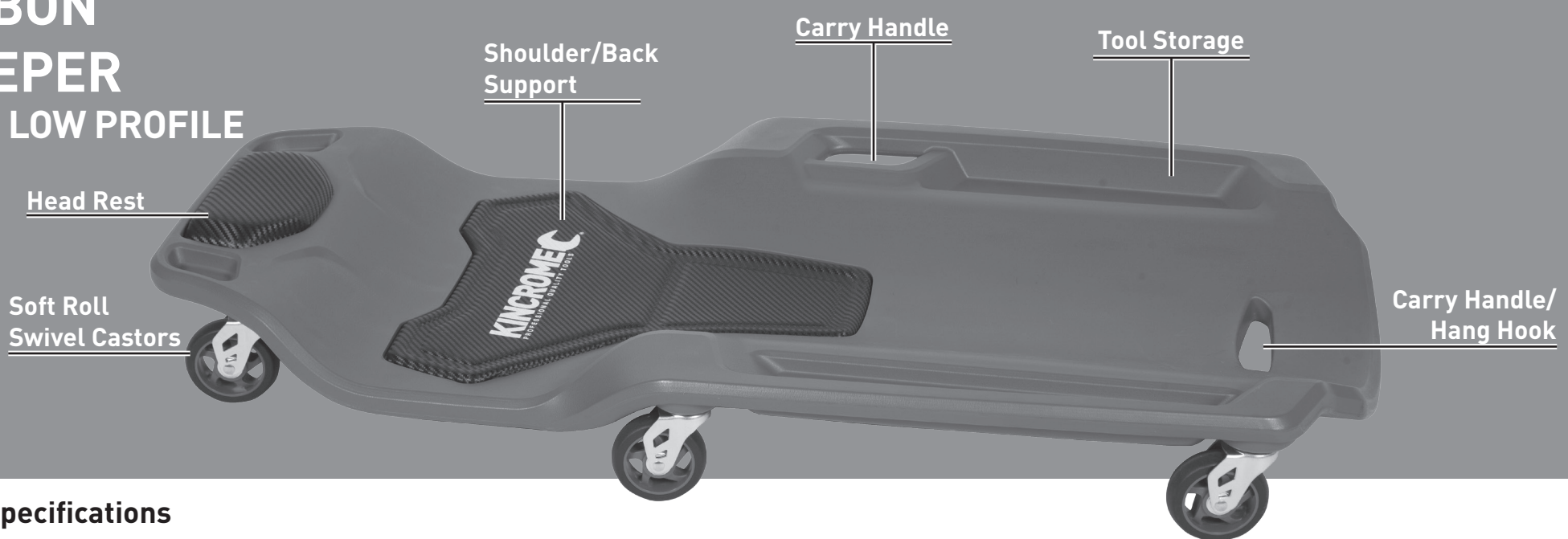

Product Specifications

Product Dimensions:..... 1040mm X 517mm X 150mm
Weight: 5.2kg
Maximum Weight Capacity:.....130kg
Construction Material:.....HDPE (High Density Polyethylene)
Castors:.....TPU (Thermoplastic Polyurethane)

General Safety Warnings

WARNING! Read all safety warnings and all instructions. Failure to follow the warnings and instructions may result in electric shock, fire and/or serious injury. Save all warnings and instructions for future reference.

1) Work Area

a. **Keep the work area clean and well lit.** Cluttered benches and dark areas increase the risks of electric shock, fire, and injury to persons.
b. **Keep bystanders, children, and visitors away while using the creeper.** Distractions can result in the loss of control of the creeper.

2) Personal Safety

a. **Stay alert. Watch what you are doing and use common sense when using the creeper.** Do not use the tool while tired or under the influence of drugs, alcohol, or medication. A moment of inattention while operating the creeper increases the risk of injury to persons.
b. **Dress properly. Do not wear loose clothing or jewellery. Contain long hair. Keep hair, clothing, and gloves away from moving parts.** Loose clothes, jewellery, or long hair increases the risk of injury to persons as a result of being caught in moving parts.

3) Additional Safety Warnings for Mechanic Creepers

a. Do NOT place under car tyres or use to move or reposition vehicles.
b. Do NOT use as a toy or skateboard.
c. Do NOT Stand stand on creeper or use as a stepping device.
d. Do NOT use if any part of the creeper is defective and/or damaged in any way.
e. Always store in an upright position in a secure place.
f. Keep out of reach of children.
g. Do NOT exceed the rated load capacity.
h. Keep hands away from rolling castors.
i. Use on smooth, level surface.

4) Assembly

1. Remove all contents from the box and place the Karbon Kreeper upside down on a flat surface (Fig 1).
2. Firmly push the 6 PU Castors to the underside of the main body, until they click into position (Fig 1).
3. To install the Head Rest, feed the 4 supplied screws through the underside of the main body (Fig 1).
4. Fit the Head Rest into the groove of the main body (Fig 2).
5. Using a phillips head screw driver (not supplied), tighten the Head Rest to the Karbon Kreeper Body (Fig 2).

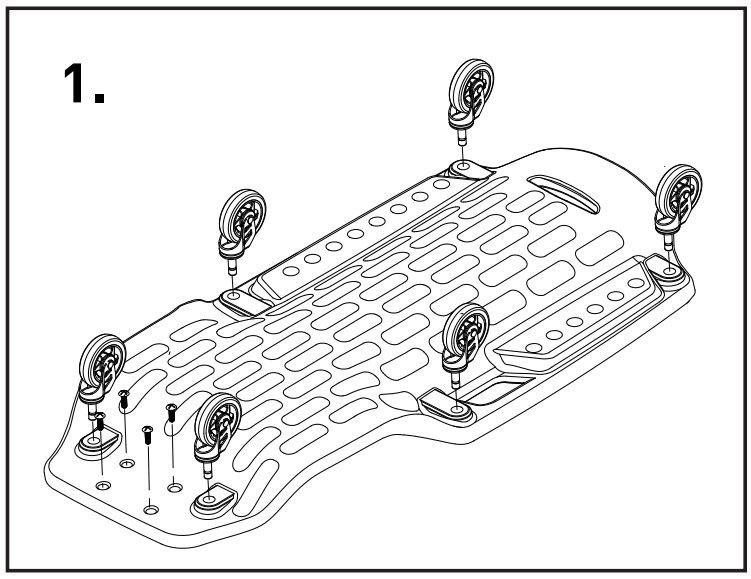

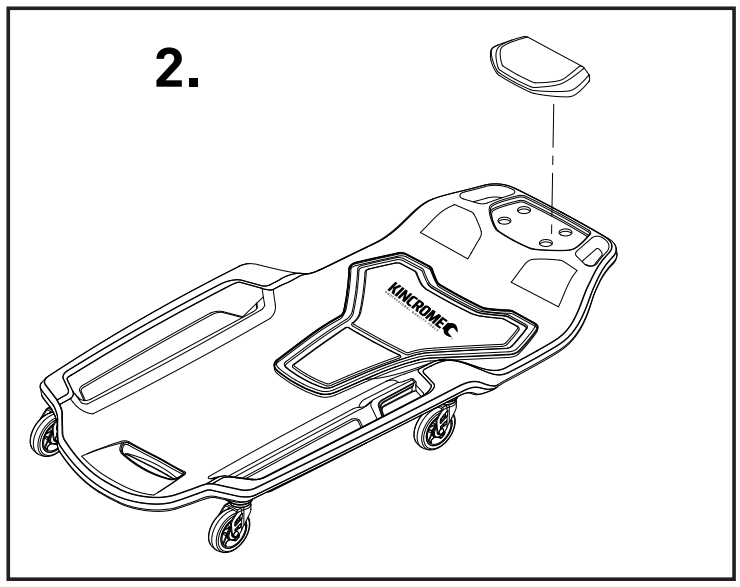

5) Operation

Caution: Refer to the Jacks (Stand/Bottle/Trolley) instruction manual on how to safely raise, support and lower the vehicle.

WARNING: Always use vehicle supports in pairs when working under a vehicle.

a. Any vehicle being supported by a jack or vehicle support stands creates a potentially hazardous working environment.

b. Do not move or roll a jack that is supporting a vehicle.

c. Never place any part of your body beneath a vehicle supported by a jack use vehicle support stands.

d. Be careful of forces applied to vehicle such as torque on a nut or bolt. These forces could cause vehicle to become unstable on vehicle support stands if vehicle support stands are not properly placed.

e. Do not turn vehicle ignition or attempt to start any vehicle supported by jackor vehicle support stands.

6) Cleaning, Maintenance & Storage

Cleaning & Maintenance

1. Wipe the K8112 Karbon Kreeper clean after each use, with warm soapy water or a light degreaser if needed.
2. Keep your work area clean to keep dirt and grime out of your castors to prolong their life.
3. Do NOT drop the Karbon Kreeper, set it down carefully on the ground for each use.

Storage

1. Store the Karbon Kreeper when it is not in use. Store it in a dry, secure place out of the reach of children. Inspect the tool for good working condition prior to storage and before re-use.
2. If possible, store the creeper off the ground via the Carry Handle/Hang Hook.

7) Spare Parts Listing

Part No.	Description	Quantity
K8112-1	Head Rest	1
K8112-2	Castor TPU	1

8) Contact Details

Australian Office Contact Details

Phone: 1300 657 528

Fax: 1300 556 005

Email: enquiries@kincrome.com.au

Website: www.kincrome.com.au

UK Office Contact Details

Mail: Kincrome UK Ltd PO Box 646 Eastleigh SO50 0NA

Email: enquiries@kincrome.co.uk

Website: www.kincrome.co.uk

9) Warranty

Warranty given by Kincrome Tools & Equipment Pty Ltd of 3 Lakeview Drive, Caribbean Park, Scoresby,Victoria, Australia (Tel +61 3 9730 7100) If this product has materials or workmanship defects (otherthan defects caused by abnormal or non warranted use) you can, at your cost, send the product to place of purchase, an authorised Kincrome service agent or one of Kincromes addresses for repair or replacement. Your rights under this warranty are in addition to any other rights you have under the Australian, United Kingdom & Ireland Consumer Law or other applicable laws. Our goods come with guarantees that cannot be excluded under the Australian, United Kingdom & Ireland Consumer Law. You are entitled to a replacement or refund for a major failure and compensation for any other reasonably foreseeable loss or damage. You are also entitled to have the goods repaired or replaced if the goods fail to be of acceptable quality and the failure does not amount to a major failure. For further details please visit www.kincrome.com.au or call us. Due to minor changes in design or manufacture, the product you purchase may sometimes differ from the one shown on the packaging.