KINCROME®
PROFESSIONAL QUALITY TOOLS

TOW BEHIND SPRAYER 117L
BROADCAST/SPOT

- 117 LITRE TANK
- 8.3LPM MAX FLOW RATE
- 100% DUTY CYCLE
- SUITABLE FOR WATER, HERBICIDES & PESTICIDES INC. ROUNDUP®



K16004
ED2 JUNE 2017

KINCROME
PROFESSIONAL QUALITY TOOLS

K16004

117L Tow Behind Sprayer
(ADD YOUR SPRAYERS BATCH CODE HERE)
BATCH CODE: _____

Owner's Manual

M797536A.1

Instructions for Assembly, Testing, Operation, Servicing, and Storage

Tow Behind Sprayers: For outdoor use with non-potable liquids such as agricultural pesticides and other water based liquids**

⚠ WARNING

READ and UNDERSTAND the Owner's Manual completely before using this sprayer. Assemble, test, and use only in accordance with the Owner's Manual instructions.
READ and FOLLOW chemical label instructions. Pesticides are hazardous chemicals.
KNOW emergency procedures BEFORE handling chemicals. Sprayer leaks, bodily chemical contact, poisoning, and spills require immediate response.
AVOID inhaling, ingesting, or coming into contact with any chemicals.
WEAR personal protective gear when filling, using, cleaning, and servicing the sprayer.
KEEP sprayer and spray materials away from children and pets. Pesticides are especially toxic to them.
EXERCISE CAUTION in vehicle handling when towing/hauling a filled sprayer to avoid loss of control or sprayer overturning.
DO NOT TURN ON POWER to sprayer until ready to spray in order to avoid unintentional spray release.
ALWAYS keep a fire extinguisher rated "AB(E)" (Dry Chemical) nearby.

Improper use of the sprayer or handling of chemicals could result in serious injury or illness to the operator or nearby persons/animals, or could cause damage to the environment.
Only use the cable clamps provided with the sprayer to connect it with the vehicle battery.

****** This sprayer is recommended for use in spraying non-flammable liquids such as pesticides, water for plants/trees or dust control, ice control chemicals that do not contain calcium chloride, sodium chloride, magnesium chloride, or other forms of chlorine, or water-based non-flammable sealants or stains for outdoor wood surfaces. The pump should not be used to transfer any product intended for human consumption. However, WE RECOMMEND THAT THE SPRAYER NOT BE USED FOR OTHER PURPOSES ONCE IT HAS BEEN USED FOR SPRAYING PESTICIDES. Any chemical will leave some residual in the tank liner or sprayer components, even after the sprayer has been properly cleaned. These residual chemicals can have unexpected effects on future uses. For example, spraying water or other liquids that are contaminated with residual pesticide may result in unforeseen hazards to plant or animal life. This sprayer should not be used by people with reduced physical, sensory or mental capabilities or lack of experience and knowledge.

Any Questions, Comments, Problems, or Part Enquiries
Call Kincrome Customer Service on 1300 657 528

CE

Hazard Signal Word Definitions

	This is the safety alert symbol. It is used to alert you to potential personal injury hazards. Obey all safety messages that follow this symbol to avoid possible injury or death.
⚠DANGER	DANGER (red) indicates an imminently hazardous situation which, if not avoided, will result in death or serious injury.
⚠WARNING	WARNING (orange) indicates a potentially hazardous situation which, if not avoided, could result in death or serious injury.
⚠CAUTION	CAUTION (yellow) indicates a potentially hazardous situation which, if not avoided, may result in minor or moderate injury.
CAUTION	CAUTION (yellow) used without the safety alert symbol indicates a potentially hazardous situation which, if not avoided, may result in property damage. fig01453

Tools Required for Assembly

- 1/2" Spanner
- Torque Wrench with minimum 5 ft-lb
- Combination Pliers
- Phillips Head Screwdriver
- Flat Head Screw Driver

Table of Contents

Intended Use 5
Summary of Important Safety Information 6
Unpacking 10
Unpacking the Manual Bag 12
Assembly 13
Machine Components 32
Operation – Important Safety Information 33
Operation – Preparing the Sprayer for Each Use 37
Operation – Using the Sprayer 39
Storage 47
Troubleshooting 53
Specifications 55
Exploded View & Parts List – K16004 117L Tow Behind Sprayer 56
Appendix A –Broadcast Spray Calibration Tables 59
Limited Warranty 60

Intended Use

The sprayer is intended for use in spraying agricultural pesticides and other non-flammable liquids.

SPRAYING PESTICIDES:

Pesticides are hazardous chemicals that must be handled with caution as directed throughout this manual and on the pesticide label. Pesticides are regulated by local states Environmental Protection Agency (EPA) and defined as:

A substance or mixture of substances intended for preventing, destroying, repelling or mitigating any pest, typically acting as a herbicide, fungicide or insecticide

The Kincrome K16004 117L Tow Behind Sprayer comes equipped with a spot spray gun and broadcast boom. Use the spot spray gun if you desire to apply pesticide only on selected plants. Use the broadcast boom if you wish to spray large ground areas.

SPRAYING OTHER LIQUIDS:

In addition to spraying pesticides, this sprayer may be used to spray other **non-flammable** liquids. Example uses include: watering plants/trees or spraying water for dust control, applying ice control chemicals that do not contain calcium chloride, sodium chloride, magnesium chloride, or applying water-based, non-flammable sealant or stain to outdoor wood surfaces. Pump will be damaged and warranty voided if applying sodium chlorite or other chlorine or bleach related chemicals.

However, **WE RECOMMEND THAT THE SPRAYER NOT BE USED FOR OTHER PURPOSES ONCE IT HAS ALREADY BEEN USED FOR SPRAYING PESTICIDES.** Any chemical will leave some residual in the tank liner or sprayer components, even after the sprayer has been properly cleaned. These residual chemicals can have unexpected effects on future uses. For example, spraying water or other liquids that are contaminated with residual pesticide may result in unforeseen hazards to plant or animal life.

Contact Kincrome Customer Service on 1300 657 528 for any questions about the appropriate use of the sprayer and/or optional accessories.

Summary of Important Safety Information

⚠ WARNING

Read and understand **this owner's manual** completely before using the sprayer. Read each **chemical label's instructions** before handling the chemical.

Improper use of the sprayer or handling of chemicals could result in serious injury or illness for the operator or nearby persons/animals, or cause damage to the environment.

LISTED BELOW is a summary of safety information of particular importance. See individual sections of this owner's manual for more details.

---------- DURING ASSEMBLY ----------

- **EXERCISE CAUTION when attaching remote switch to battery terminals**. Follow the steps listed in the Assembly section of this manual i*n exact sequence* when connecting the sprayer's remote switch battery clamps to the battery terminals. *Caution must be exercised to avoid contact with battery acid and to prevent sparking.*
- **CHECK and TEST completed assembly** as directed in this manual. Serious injury could result from chemical leaks if sprayer is improperly assembled.
- **DO NOT MODIFY sprayer design.**

---------- DURING OPERATION ----------

General Chemical Safety

- **READ and FOLLOW each chemical label's instructions and warnings**.
- **AVOID inhaling, ingesting, or coming into contact with any chemicals**.
- **KNOW applicable licensing and regulatory requirements** for the chemical you plan to use.
- **KNOW emergency procedures before handling chemicals.** Carefully review "Chemical Accident Procedures" listed below and later in this manual. Also see First Aid instructions on the chemical label.
- **WEAR protective clothing, eye protection, and chemical resistant gloves** when filling, using and cleaning the sprayer. Wear additional protective gear, such as facemask or apron, as recommended on the chemical label.
- **EXERCISE EXTRA CAUTION around children and pets.** Pesticides are especially toxic to them. Keep sprayer and spray materials away from them at all times.
- **DO NOT MIX OR POUR chemicals in an enclosed, unventilated area**
- **DO NOT USE flammable or corrosive chemicals** in the sprayer.
- **FLUSH the sprayer before switching chemicals** in order to prevent dangerous chemical interactions.
- **STORE pesticides in a correctly labeled container and in a secure location**.
- **MONITOR the health of operators frequently exposed to pesticides**, as recommended by the chemical label or local/federal regulations.

Chemical Application Safety

Before Spraying

- **INSPECT and PREPARE sprayer before each use** as directed in this manual.
- **DO NOT TURN ON POWER to sprayer until ready to spray** in order to avoid unintentional spray release.
- **MAKE SURE BROADCAST NOZZLES ARE ORIENTED to spray straight down** before starting the sprayer. An incorrectly positioned broadcast nozzle may spray chemicals on you or others.
- **DO NOT SPRAY when wind speed exceeds 6.5 km/h** in order to minimize spray drift.
- **CLEAR work area of people/ pets and POST warning notices** to restrict access for the period recommended on chemical label.
- **KEEP sprayer and spray away from children/pets**. Pesticides can be especially toxic to children and animals.
- **DO NOT ALLOW anyone younger than 16 to operate sprayer** since pesticides are especially toxic to children.

During Spraying

- **DO NOT OVERAPPLY pesticide**. Apply at rate recommended by chemical manufacturer. Excess pesticide can be dangerous to humans/animals, damage desirable plants, and contaminate soil and water sources.
- **DO NOT EAT, DRINK, SMOKE, RUB YOUR EYES, or TOUCH YOUR BARE SKIN while handling chemicals and spraying**.
- **NEVER POINT THE SPRAY GUN at people or animals.**

Summary of Important Safety Information (continued)

- **EXERCISE EXTRA CAUTION when spraying near areas accessible to children and pets**.
- **CLEAN up spills immediately** per instructions on the chemical label.

- **TURN OFF vehicle and set brake or block wheels, TURN OFF power to sprayer, and RELIEVE system pressure** before leaving sprayer unattended.
- **SEE Trouble shooting section of this manual before attempting any repairs**. Wear personal protective equipment and follow safety instructions.

After Spraying

- **CLEAN sprayer immediately after use** according to the directions provided in this manual.
- **DECONTAMINATE yourself after you are** done spraying and have cleaned the sprayer. Wash all exposed areas of the body with soap and water, and remove and launder clothing.
- **DISPOSE OF or STORE remaining chemicals in secure storage with correctly marked container**.

Towing/Hauling Safety

- **READ towing/hauling safety instructions** in your towing/hauling vehicle manual.
- **DO NOT ALLOW drivers younger than 16** to operate the towing/hauling vehicle with the filled sprayer attached.
- **Check your local state regulations for further information regarding ATV use and laws.**
- **MAKE SURE SPRAYER IS SECURELY ATTACHED to vehicle.**
- **EXERCISE CAUTION in vehicle handling when towing/hauling filled sprayer** to avoid loss of control or overturning.
  - **Keep speed to a minimum** so you can maintain control. Reduce speed prior to turns.
  - **Allow for wider turns** and for **more distance to stop**.
  - **Avoid any sudden** steering maneuvers, starts, or stops that could create sway.
- **SLOW DOWN AND EXERCISE EXTRA CAUTION ON SLOPED OR UNEVEN TERRAIN. Pick the most level route possible. Drive up and down slopes when necessary, rather than across. Use a vehicle equipped with a roll over protection system (ROPS) if you will be working on non-level terrain.**
- **BE AWARE of the added length of the sprayer and that visibility may be reduced when making turns or backing up.**
- **DO NOT RIDE or TRANSPORT cargo on the sprayer.**
- **COMPLY WITH all local, state, and federal towing requirements if you will be towing on public roads.**
- **TURN OFF both sprayer and vehicle, and SET BRAKES or BLOCK WHEELS before leaving unattended.**

Chemical accident procedures

Immediate response is necessary in the event of sprayer leaks, bodily chemical contact, poisoning, or spills.

Sprayer leak	**If the sprayer develops a leak, *immediately stop spraying***. Turn off power to the sprayer and follow directions below, as applicable.
Bodily chemical contact	**Personal contamination can occur when chemicals splash, spill, or spray directly onto a person.** 1. Immediately follow First Aid instructions on chemical label. General procedures can include: a) Eyes – immediately flush with water. b) Skin – wash all contaminated skin surfaces with soap and water. c) Clothing – remove contaminated clothing. Dispose of heavily contaminated clothing per chemical label instructions. 2. Seek medical advice if instructed on the label or the victim experiences symptoms of harmful effects. Bring the chemical label for reference.

Summary of Important Safety Information (continued)

Poisoning by ingestion or inhalation	**In case of poisoning from ingestion or inhalation**: ***If the victim has collapsed or is not breathing, call 000***. Otherwise: 1. If you are the victim, immediately seek assistance from nearby personnel because you may become incapacitated. 2. Immediately follow first aid instructions on chemical label. 3. Call a poison control center for further advice. **In Australia. Call 13 11 26.** Have the chemical label available for reference.
Chemical spills	**Chemical spills must be quickly contained and properly cleaned up.** Refer to the chemical label for any specific clean-up instructions. General procedures include: 1. **Controlling** the spill by stopping the source of the spill. 2. **Containing** the spill so that it does not spread and get into water sources. 3. **Cleaning up** the spill immediately. 4. **Seeking additional advice** from: - *Chemical manufacturer*. See chemical label for contact information. - Contact the *APVMA (Australian Pesticides & Veterinary Medicines Authority)*, by emailing enquiries@apvma.gove.au or calling (02) 6210 4701.

Summary of Important Safety Information (continued)

⚠ WARNING

READ and UNDERSTAND the Owner's Manual completely before using this sprayer. Assemble, test, and use only in accordance with the Owner's Manual instructions.

READ and FOLLOW chemical label instructions. Pesticides are hazardous chemicals which must be handled carefully.

KNOW emergency procedures BEFORE handling chemicals. Sprayer leaks, bodily chemical contact, poisoning, and spills require immediate response.

AVOID inhaling, ingesting, or coming into contact with any chemicals.

EXERCISE CAUTION in vehicle handling. Vehicle will be less stable and handle very differently with filled sprayer attached.

DO NOT TURN ON POWER to sprayer until ready to spray in order to avoid unintentional spray release.

Improper use of the sprayer or handling of chemicals could result in serious injury or illness to the operator or nearby persons/animals, or could cause damage to the environment.

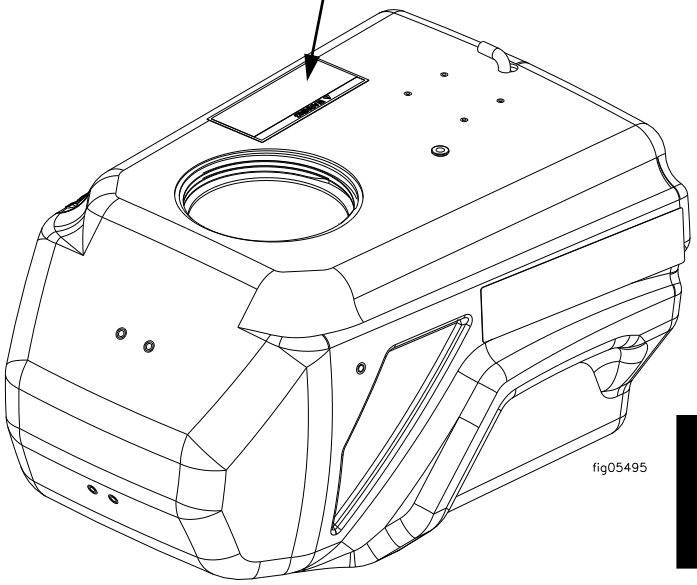

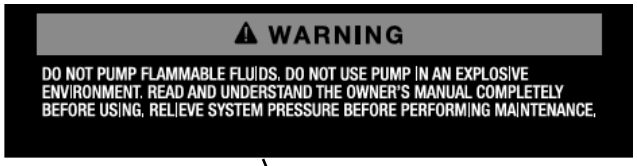

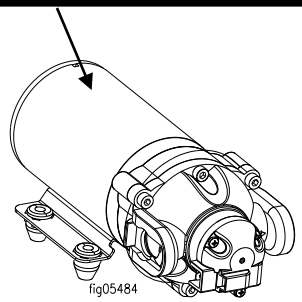

Part#	Description
K16004-60	Kincrome Tank Chemical Label
K16004-61	Kincrome Pump Label

Always make sure safety labels are in place and in good condition. If a safety label is missing or not legible, order new labels or unsafe operation could result.
To order replacement safety labels, call Kincrome Customer Service on 1300 657 528.

Unpacking

Closely inspect all contents in the shipping carton.

Note that some parts are shipped inside the tank.

- If you have missing or damaged components, please contact Kincrome Customer Service on 1300 657 528.

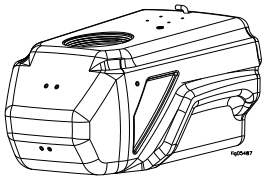

K16004-35
Tank

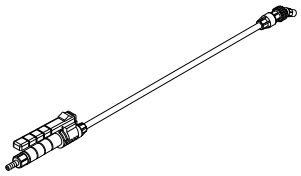

K16000-1
Spot Sprayer Gun
Assembly
Qty 1

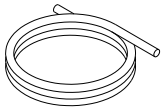

K16004-49
Gun Hose
Qty 1

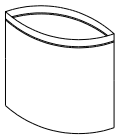

Manual Bag

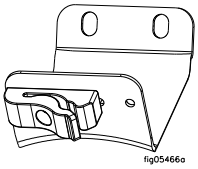

K16003-19,
K16000-12,
K16001-12,
Upper Hose Wrap
Bracket
(Qty 1)

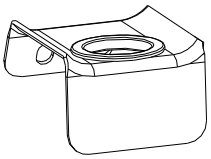

K16003-18
K16003-31
Lower Hose Wrap
Bracket
(Qty 1)

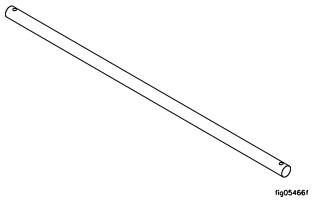

K16004-55
Axle
(Qty 1)

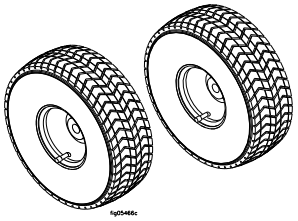

K16004-28
Wheels/Tyres
(Qty 2)

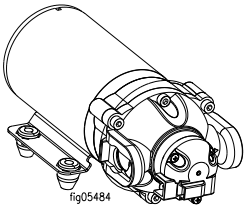

K16004-22
Pump
(Qty 1)

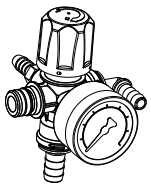

K16001-15,
K16004-43, 44, 45, 46
Pressure Regulator Assembly
(Qty 1)

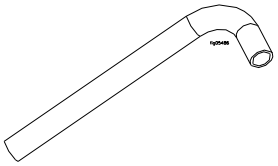

K16004-44
Draw Tube Hose
(Qty 1)

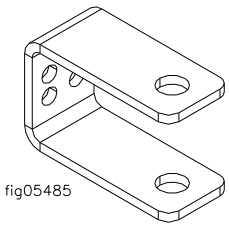

K16004-27
Pivot Hitch
(Qty 1)

Unpacking (continued)

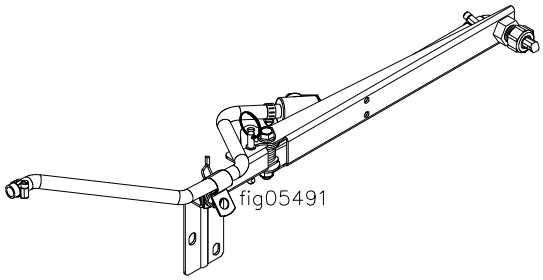

Right Broadcast Boom
Assembly
(Qty 1)

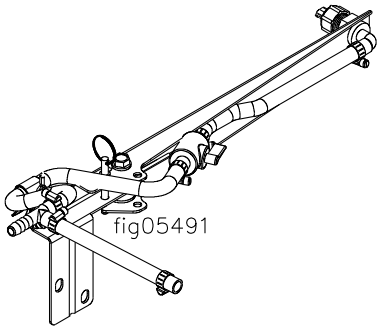

Left Broadcast Boom
Assembly
(Qty 1)

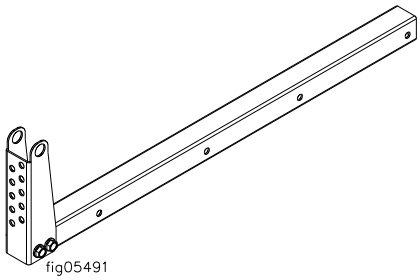

Tow Bar Assembly
(Qty 1)

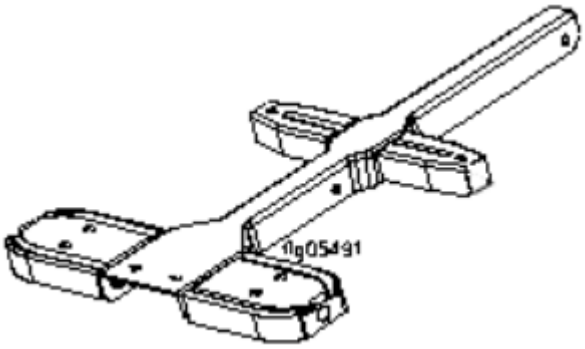

Cart Assembly
(Qty 1)



K16004-41
Suction Hose
Qty 1

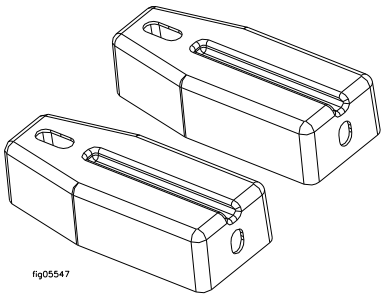

K16004-51
Front Tank Bracket
Qty 2

Unpacking the Manual Bag

Note: Items in this section are found in the manual bag.

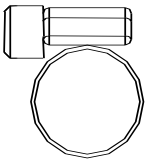

K16000-2
3/8” Hose Clamp
Qty 4

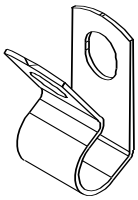

K16001-13
Hose Clip
Qty 1

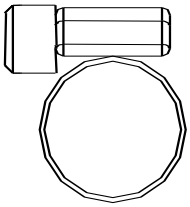

K16001-20
½” Hose Clamp
Qty 2

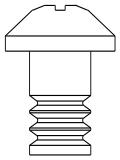

K16001-3
#10-24 x 1”
Screw
Qty 3

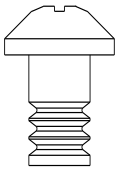

K16004-59
#10-24 x 1 1/8”
Screw
Qty 1

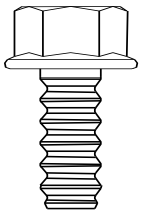

5/16” x 3/4” Bolt
Qty 2

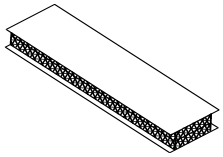

K16003-39
Hook & Loop Tape
Qty 1

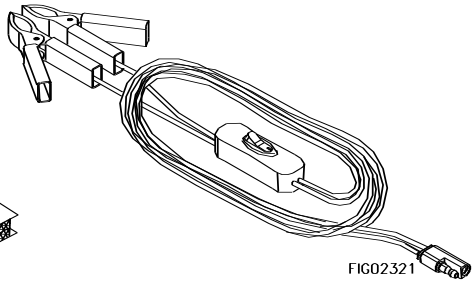

K16000-5
Wire Harness w/
Remote Switch
Qty 1

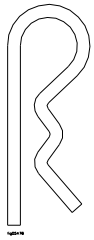

K16004-36
Axle Pin
Qty 2
792778

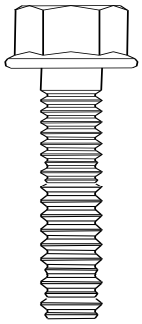

5/16” x 2-1/4” Bolt
Qty 1

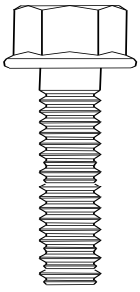

5/16” x 2” Bolt
Qty 2

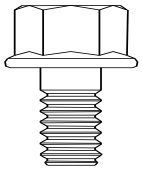

5/16” x 1/2” Bolt
Qty 17

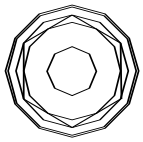

5/16” Nut
Qty 5

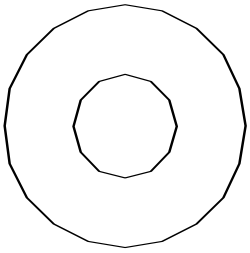

K16003-7
Axle Washer
Qty 4

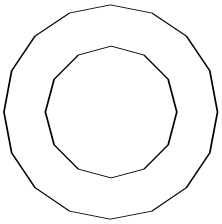

K16003-2
Rubber Washer

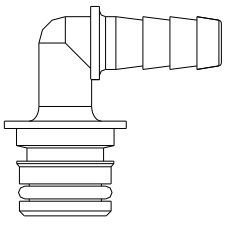

K16004-21
1/2” QC HB Elbow
Qty 1

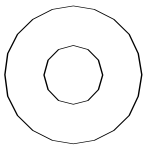

#10 Washer
Qty 4

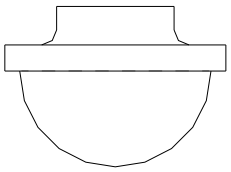

K16001-8
Suction Strainer
Qty 1

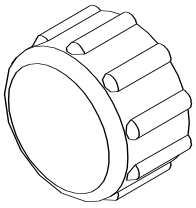

K16003-5
Drain Cap
Qty 1

Assembly

Step 1 – Tow Bar Hitch Assembly

- Insert axle through rear holes in cart assembly.
- Note: If axle does not fit smoothly through holes in cart assembly, cart bolts may need to be loosened.

Tools Needed

- N/A

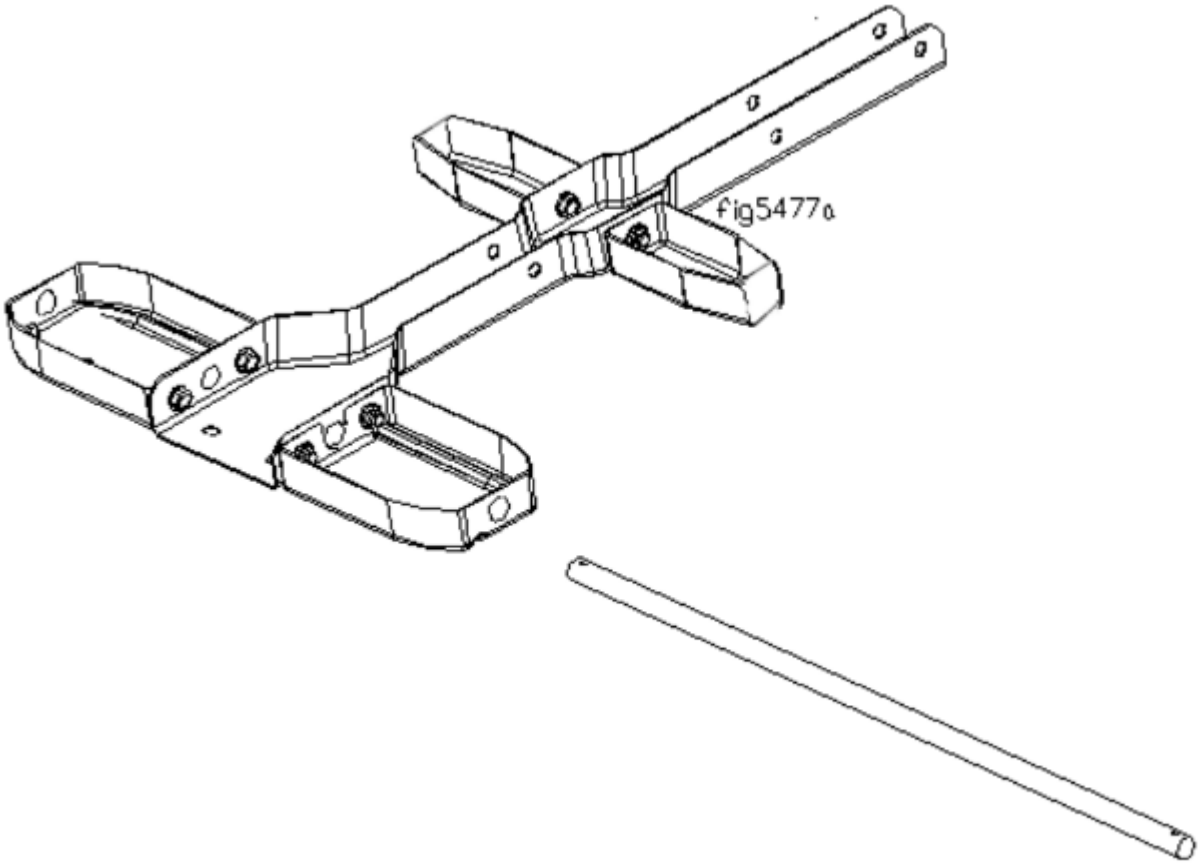

Assembly

Step 2a – Tow Bar Assembly

- Align tow bar assembly with cart assembly as shown below.
- Insert bolts and secure with nuts. Torque to 20 Ft.-Lbs.

Tools Needed

- 1/2” wrench
- Torque wrench

Fasteners Needed from Owner’s Manual Bag:

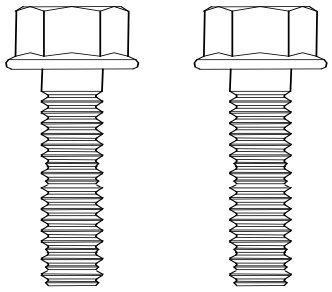

5/16” x 2” Bolt
Qty 2

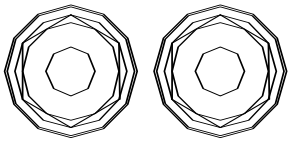

5/16” Nut
Qty 2

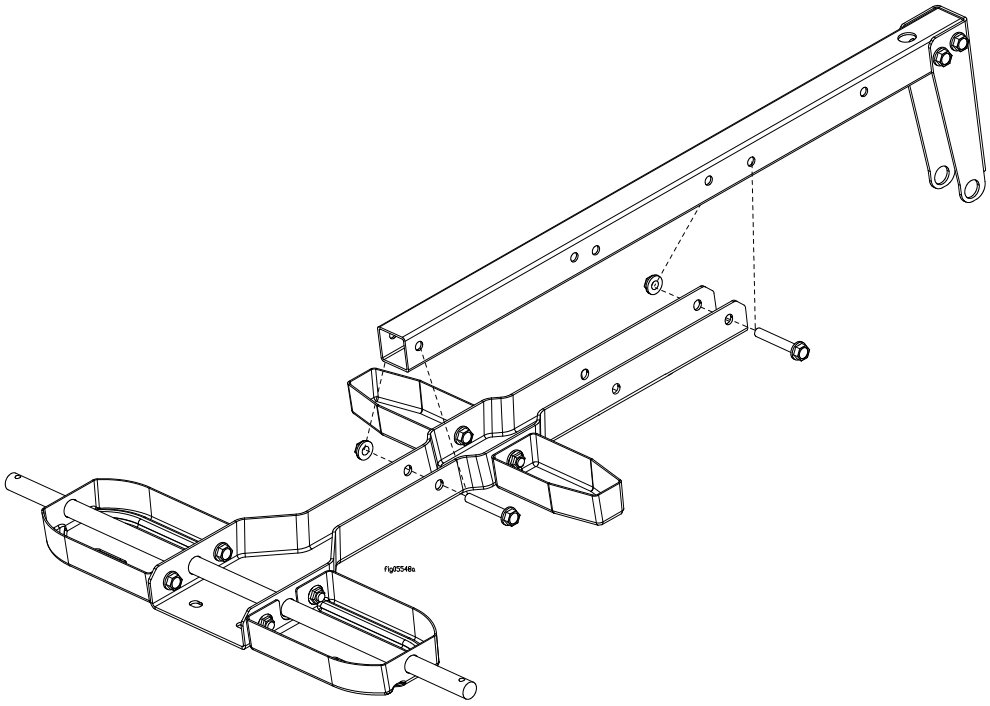

Assembly

Step 2b – Tow Bar Assembly

- Align brackets with cart assembly as shown below.
- Insert bolt and secure with nut. Torque to 20 Ft.-Lbs.

Tools Needed

- 1/2” wrench
- Torque wrench

Fasteners Needed from Owner’s Manual Bag:

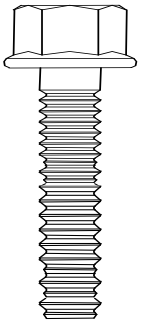

5/16” x 2-1/4” Bolt
Qty 1

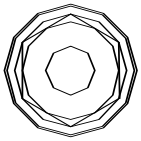

5/16” Nut
Qty 1

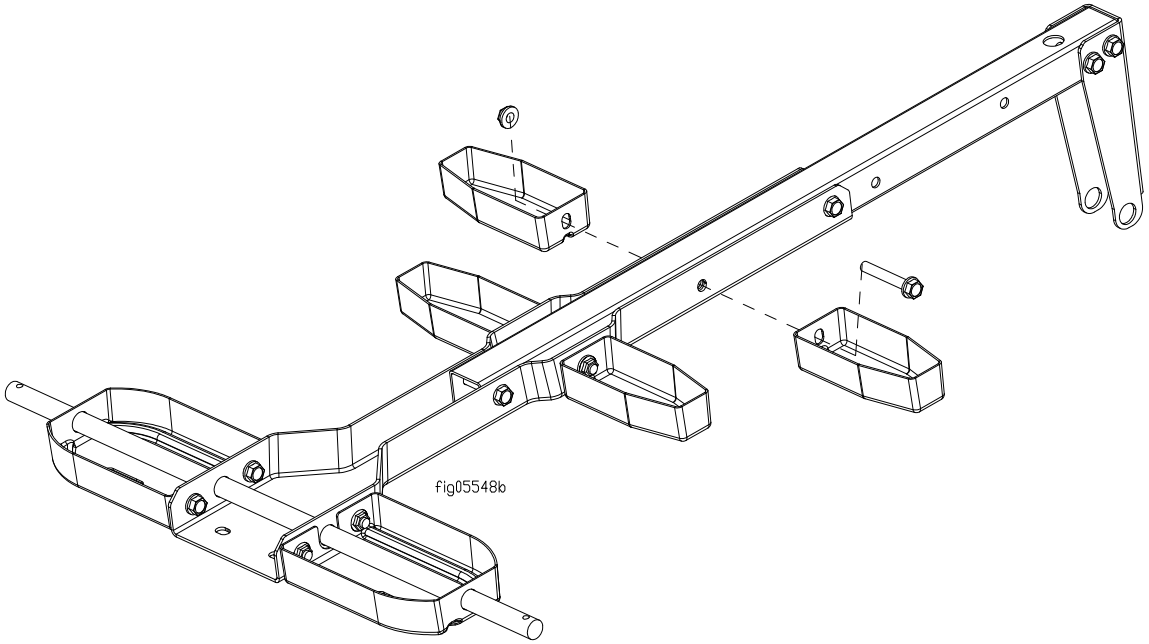

Assembly

Step 3 – Cart to Tank Assembly

- Place tank upside down on flat surface.
- Align cart assembly on bottom of tank.
- Insert bolts and torque to 5 Ft.-Lbs.
- Note: if holes do not properly align with tank inserts, loosen bolts on cart. After securing cart to tank, torque cart bolts to 20 Ft.-Lbs.
- Press rubber washer into drain cap with finger.
- Thread drain cap on to tank until hand tight.

Tools Needed

- 1/2” wrench
- Torque wrench

Fasteners Needed from Owner’s Manual Bag:

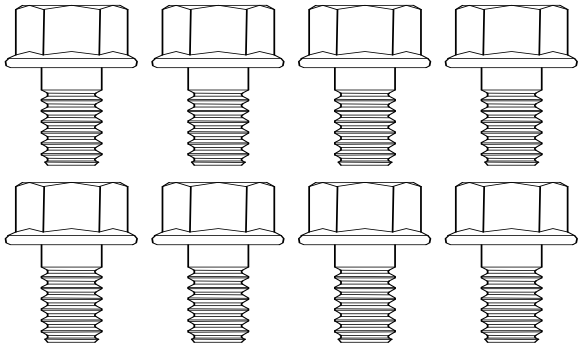

5/16” x 1/2” Bolt
Qty 8

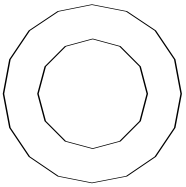

K16003-2
Rubber Washer
Qty 1

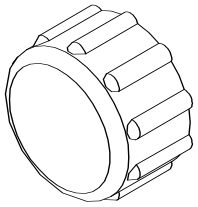

K16003-5
Drain Cap
Qty 1

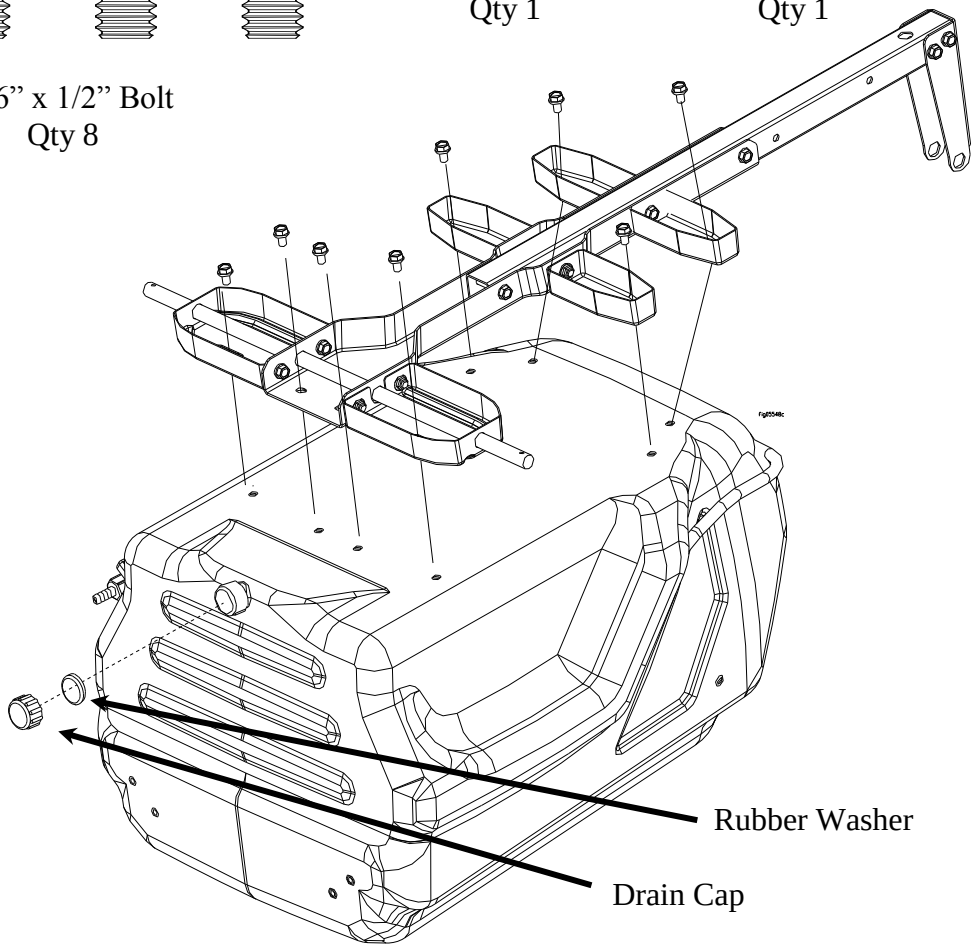

Assembly

Step 4 – Wheel Assembly

- Insert wheels onto axle.
- Install axle washers (2 per wheel).
- Insert axle pin through hole in axle.
- Note: Check that tires are inflated to the correct pressure.

Tools Needed

- Pliers

Fasteners Needed from Owner's Manual Bag:

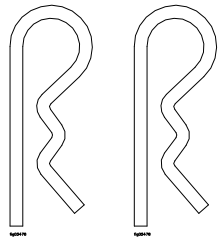

K16004-36
Axle Pin
Qty 2

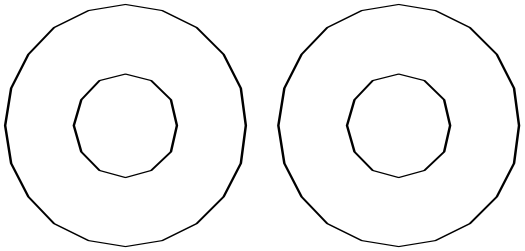

K16003-7
Axle Washer
Qty 4

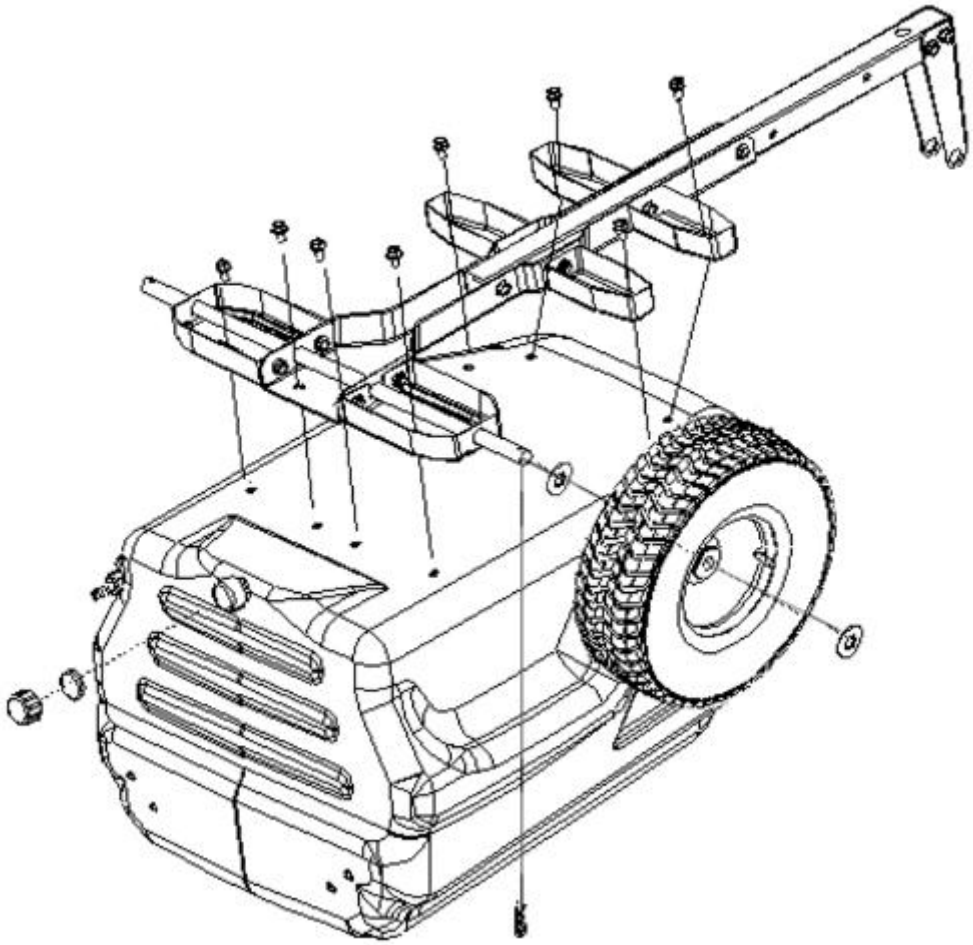

Step 5 – Suction Tube Assembly

- Insert black PVC suction tube through grommet near rear of tank. Note: wet suction tube with soap and water solution before inserting through grommet to ease installation.
- Remove tank cap and insert suction strainer on to end of suction tube.
- Insert suction tube until the suction strainer touches bottom of tank.

Tools Needed

- N/A

Components Needed from Owner's Manual Bag:

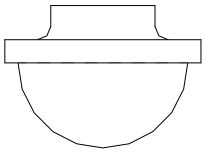

K16001-8
Suction Strainer
Qty 1



K16004-41
Draw tube

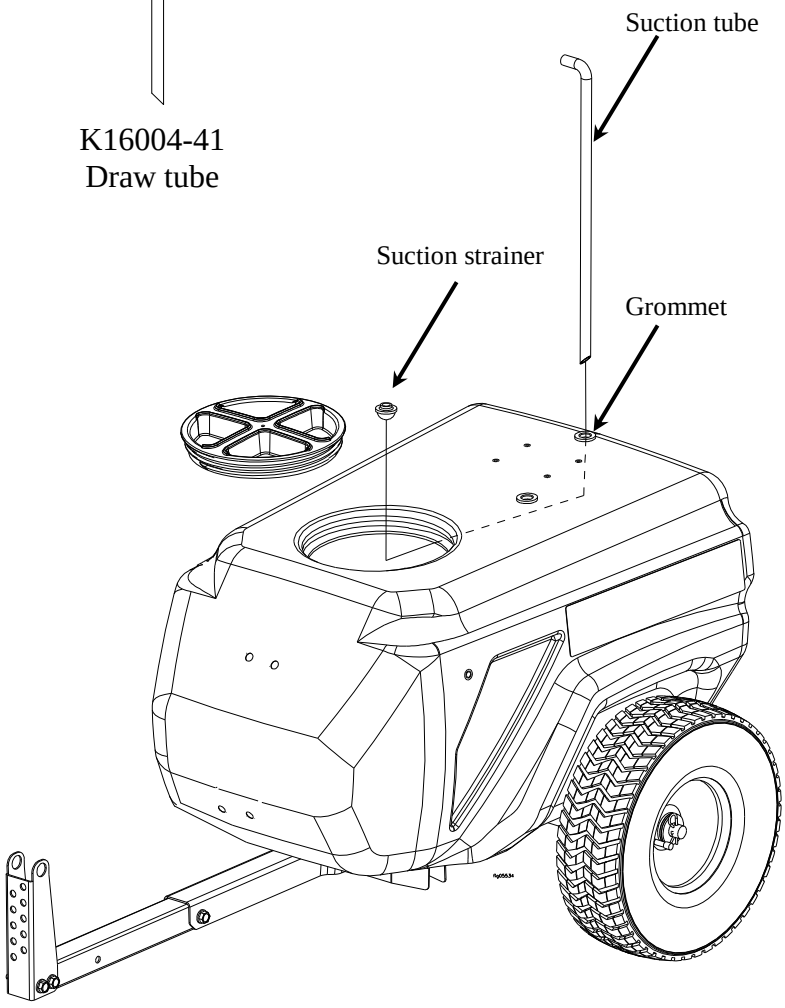

Assembly

Step 6 – Hose Wrap Assembly

- Align upper and lower hose wrap brackets with inserts in tank.
- Insert bolts and torque to 5 Ft.-Lbs.

Tools Needed

- 1/2” wrench
- Torque wrench

Fasteners Needed from Owner’s Manual Bag:

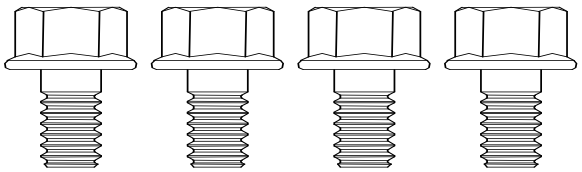

5/16” x 1/2” Bolt
Qty 4

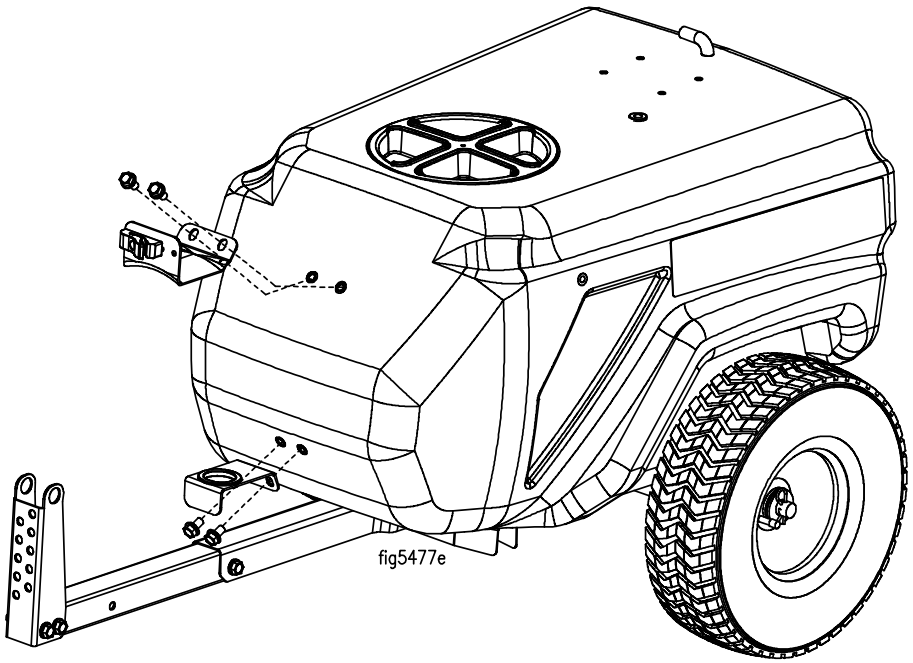

Assembly

Step 7 – Pump Assembly

- <u>REMOVE Red Travel Plugs from Inlet & Outlet Port before assembly.</u>
- Insert regulator assembly into *Outlet* port of pump and slide red QC clip closed.
- Insert hose barb fitting into *Inlet* port of pump and slide red QC clip closed.

Tools Needed

- N/A

Fasteners Needed from Owner's Manual Bag:

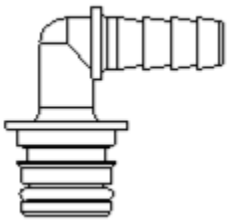

K16004-21
1/2" QC HB Elbow
Qty 1

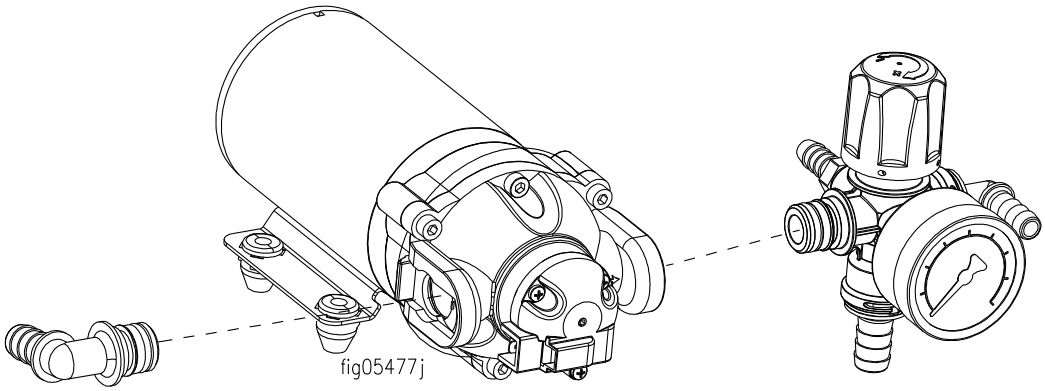

Assembly

Step 8 – Pump to Tank Assembly

- Apply soap to bypass fitting on regulator.
- Press bypass fitting into the grommet.
- Install (1) long screw through tether, washer and front left pump foot and into threaded hole in tank until tight.
- Install (3) short screws through washers and pump feet and into threaded holes in tank until tight. Note: damage to rubber pump feet could occur if screws are over-tightened.

Tools Needed

- Phillips head screwdriver

Fasteners Needed from Owner's Manual Bag:

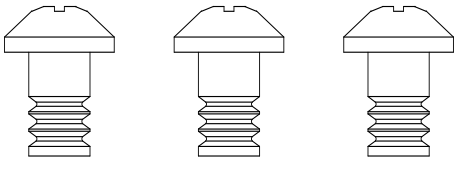

#10-24 x 1" Screw
Qty 3

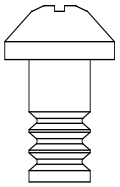

#10-24 x 1 1/8" Screw
Qty 1

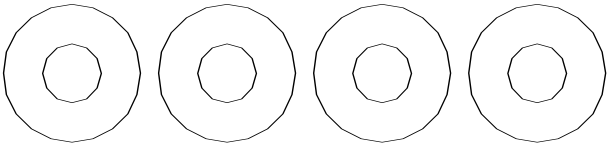

K16004-8
Nylon Washer
Qty 4

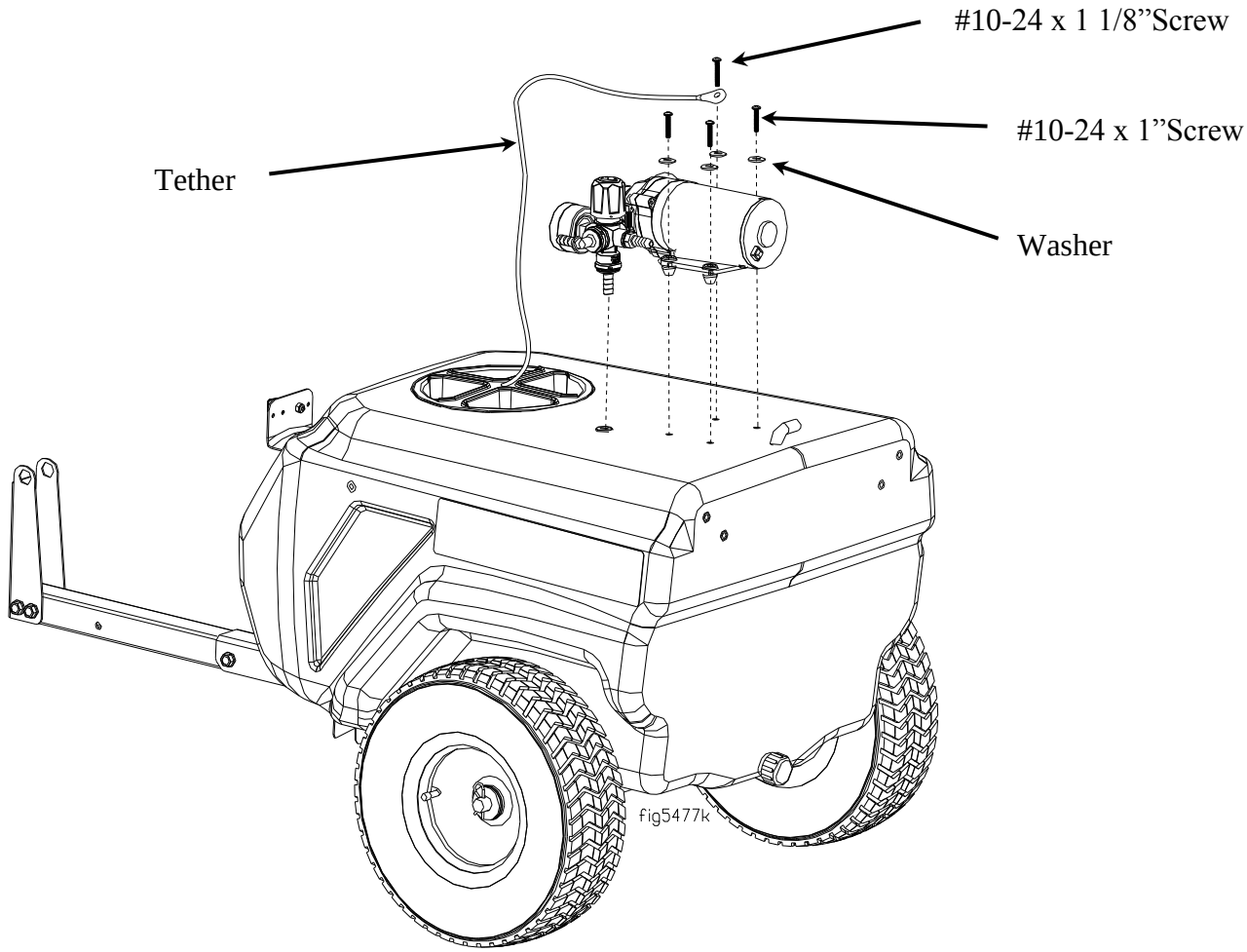

Step 9 – Boom Bracket Assembly

- Insert bolts through boom bracket slots and into threaded inserts in the tank. Torque to 5 Ft.-Lbs.
- Slide hose clamp over hose.
- Install hose onto hose barb on regulator assembly. Secure with hose clamp until tight.

Tools Needed

- 1/2” wrench
- Torque wrench
- Flat head screwdriver

Fasteners Needed from Owner’s Manual Bag:

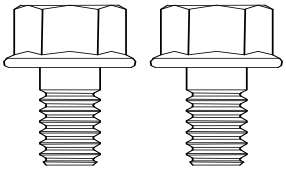

5/16” x 1/2” Bolt
Qty 2

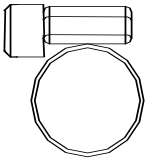

K16000-2
3/8” Hose Clamp
Qty 1

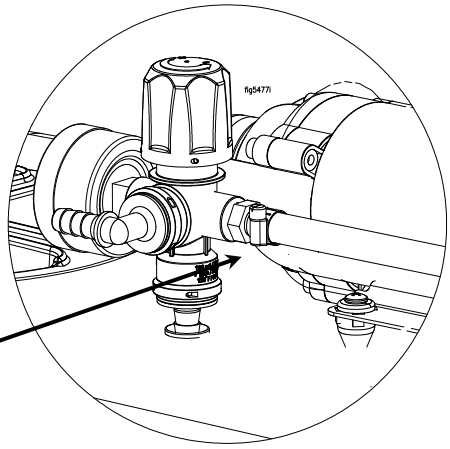

Hose barb on
regulator assembly

Hose on broadcast
boom assembly

Hose clamp

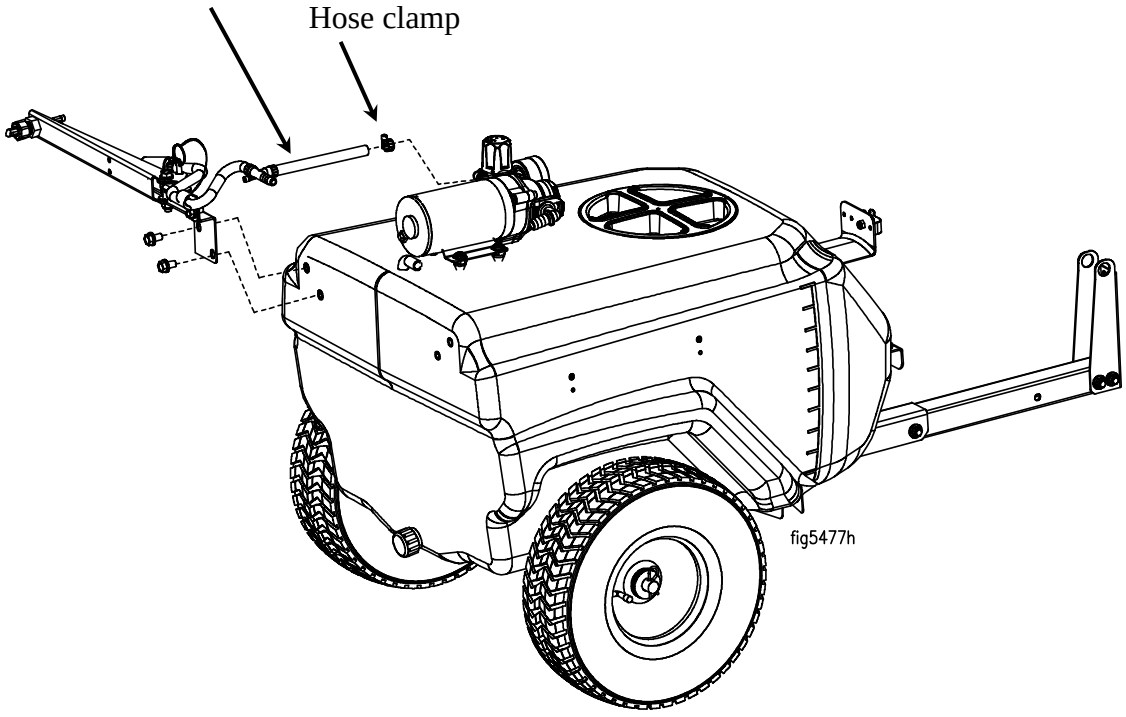

Step 10 – Broadcast Boom Assembly

- Insert bolts through broadcast boom slot and into threaded inserts in the tank. Torque to 5 Ft.-Lbs.
- Slide hose clamp onto hose.
- Install hose onto hose barb tee. Secure with hose clamp until tight.

Tools Needed

- 1/2” wrench
- Torque wrench
- Flat head screwdriver

Fasteners Needed from Owner’s Manual Bag:

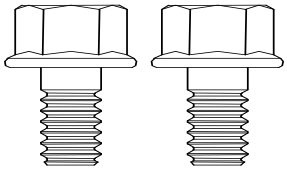

5/16” x 1/2” Bolt
Qty 2

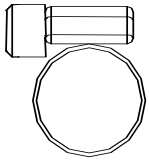

K16000-2
3/8” Hose Clamp
Qty 1

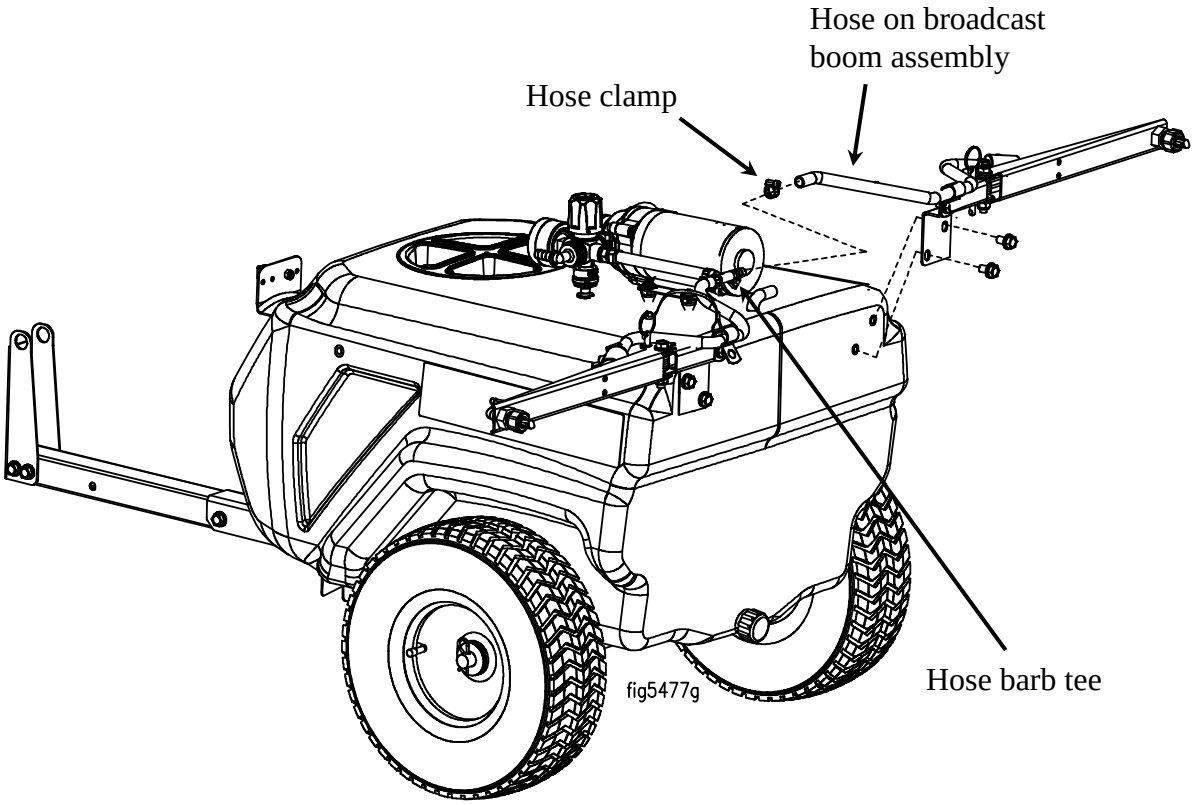

Step 11 – Draw Tube Hose Assembly

- Slide hose clamps over both ends of draw tube hose.
- Slide short end of hose over PVC draw tube.
- Slide long end of hose over hose barb elbow fitting.
- Secure both ends with hose clamps until tight.

Tools Needed

- Flat head screwdriver

Fasteners Needed from Owner's Manual Bag:

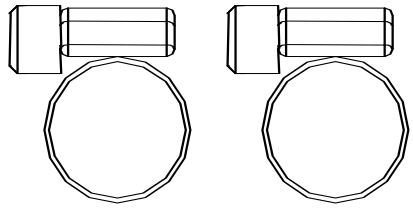

K16001-20
1/2" Hose Clamp
Qty 2

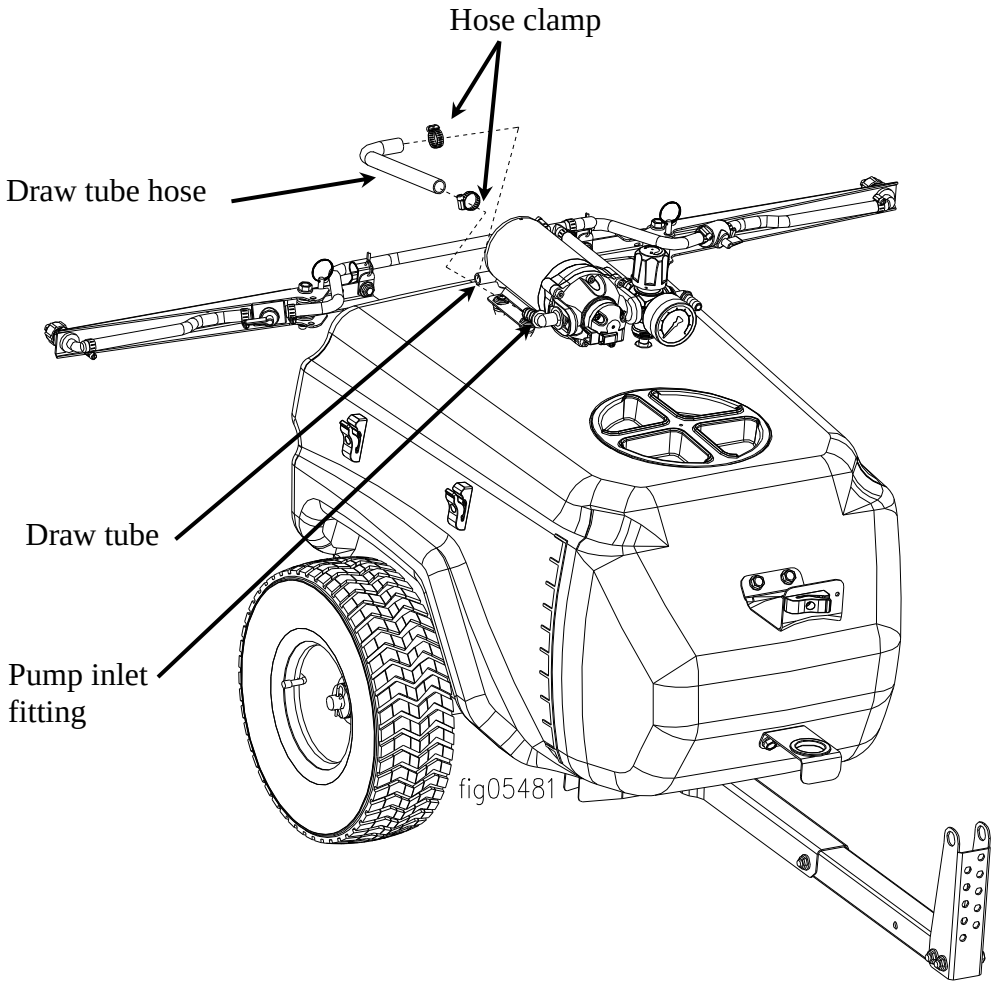

Assembly

Step 12 – Hose to Spray Gun Assembly

- Slide hose clamp over the end of the gun hose.
- Push the hose onto the gun hose barb.
- Slide the hose clamp over the hose barb and tighten.

Tools Needed

- Philips head screwdriver

Fasteners Needed from Owner's Manual Bag:

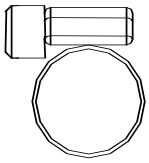

K16000-2
3/8" Hose
Clamp
Qty 1

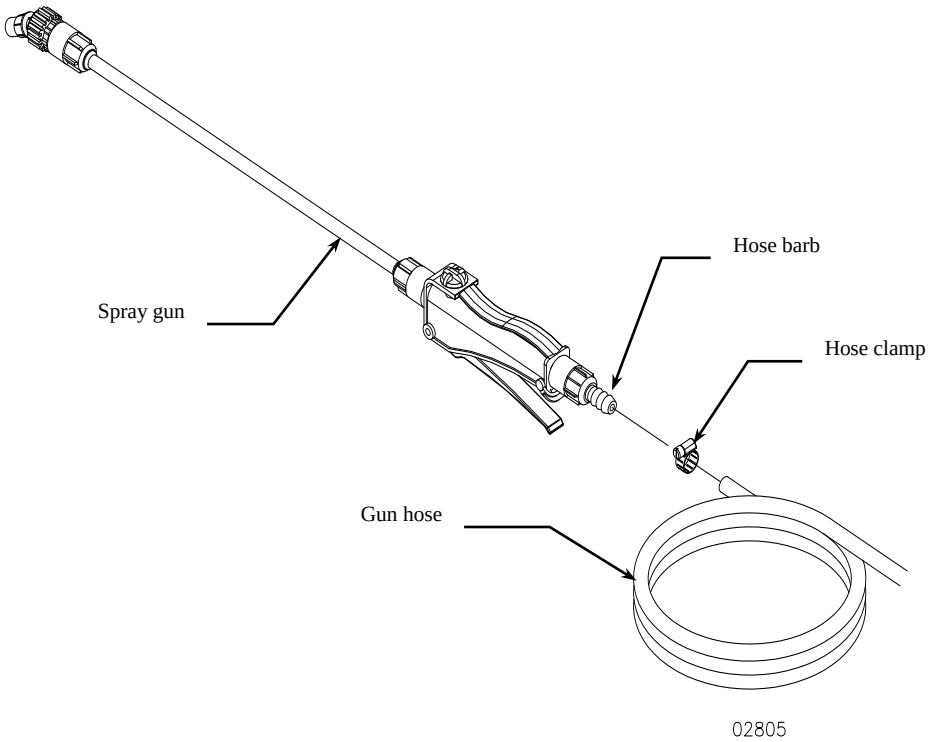

Step 13 – Spray Gun Hose to Pump Assembly

- Route gun hose through hose clip.
- Slide hose clamp over end of gun hose.
- Push the hose onto the pump hose barb fitting and tighten hose clamp.
- Align hose clip with threaded insert on the side of the tank. Insert bolt and torque to 5 Ft.-Lbs.

Tools Needed

- 1/2” wrench
- Torque wrench
- Flat head screwdriver

Fasteners Needed from Owner’s Manual Bag:

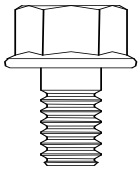

5/16” x 1/2” Bolt
Qty 1

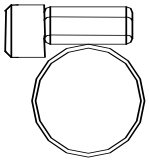

K16000-2
3/8” Hose Clamp
Qty 1

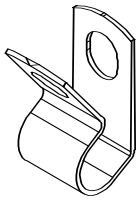

K16001-13
Hose Clip
Qty 1

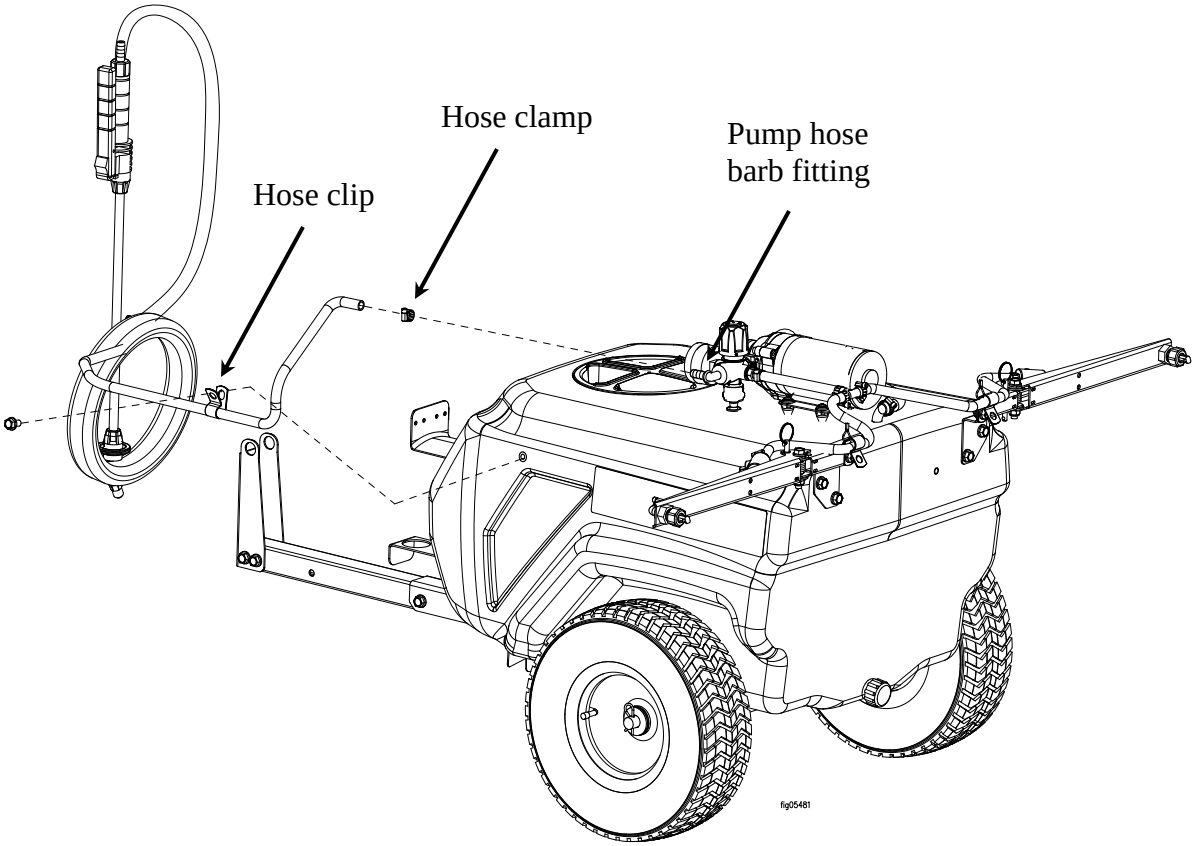

Step 14 – Hitch Bracket Assembly

- Align the hitch bracket with the hitch on the tow bar assembly. (Note: there are several different mounting locations depending on the hitch height of the towing vehicle. Ensure sprayer has slight incline towards the rear of the tank when attached to tow vehicle. This will ensure all the fluid is emptied from tank.)
- Insert bolts through holes and secure with nuts. Torque to 27 Ft.-Lbs.

Tools Needed

- 1/2” wrench
- Torque wrench

Fasteners Needed from Owner’s Manual Bag:

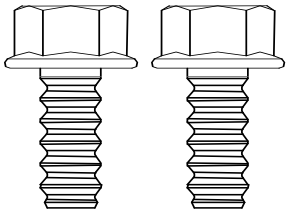

5/16” x 3/4” Bolt
Qty 2

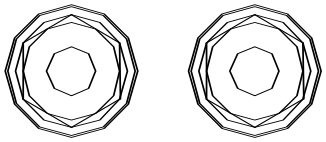

5/16” Nut
Qty 2

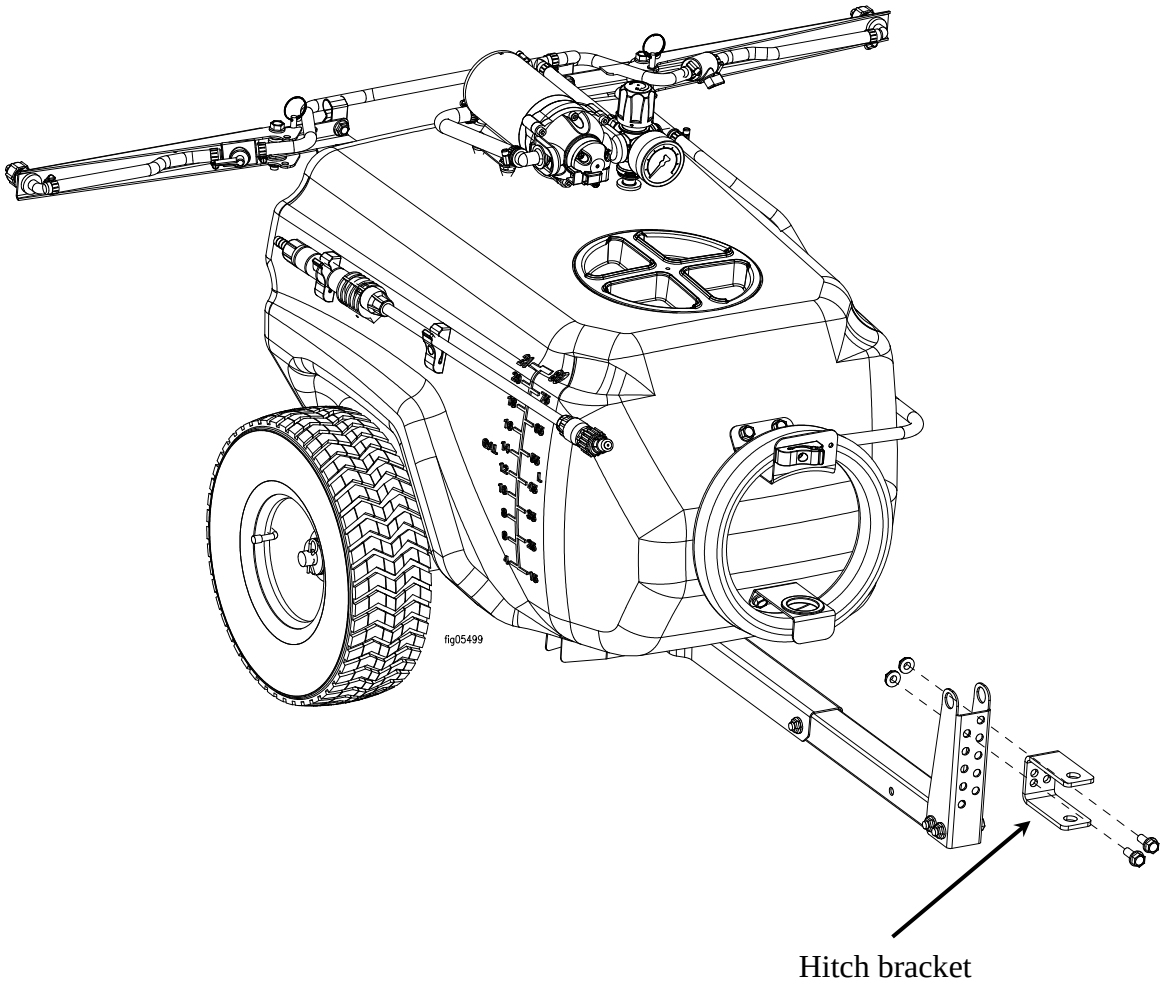

Step 15 – Connect Sprayer to Towing Vehicle

- Secure the sprayer to the tow vehicle with a hitch pin (not included).
- Make sure broadcast boom nozzles are pointed straight down. If they are not, loosen the nozzle retaining nut, orient the opening of the boom nozzle to point straight down, then retighten the nozzle retaining nut.

Tools Needed

- N/A

Fasteners Needed from Owner's Manual Bag:

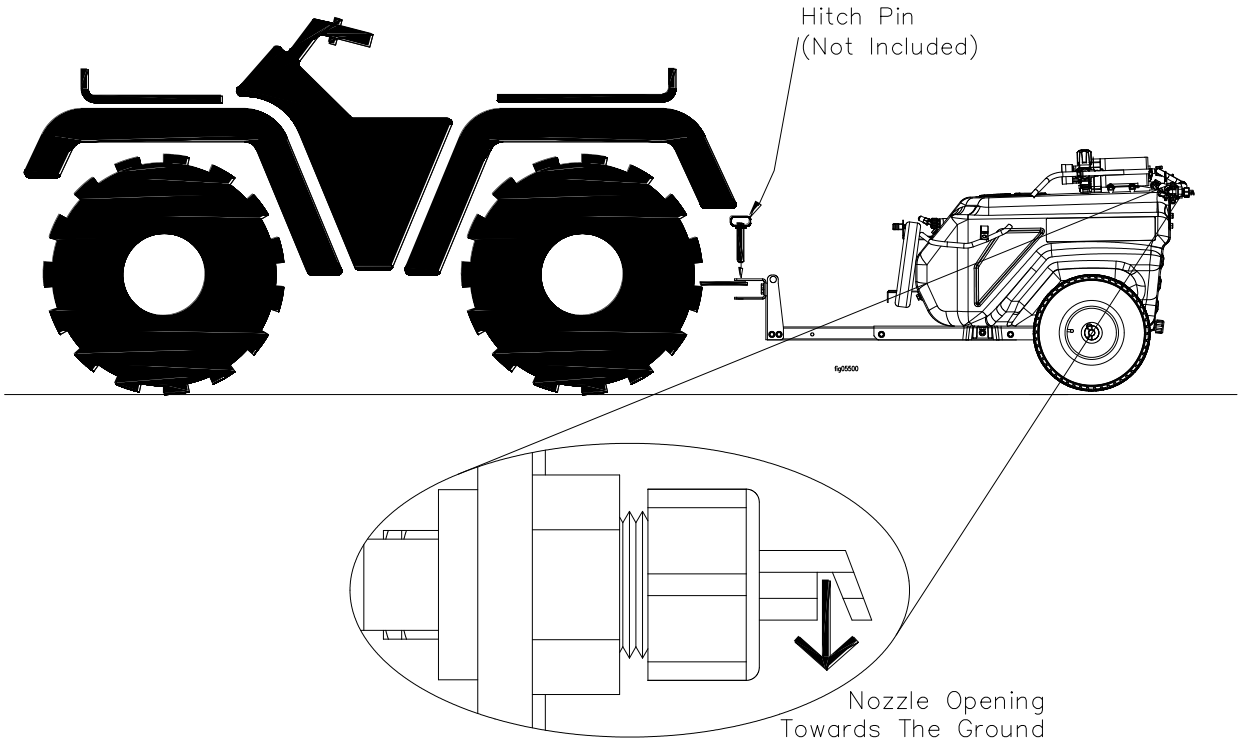

Step Sixteen: Connect remote switch to vehicle battery

⚠ WARNING

Batteries are hazardous because they contain caustic acid, can emit explosive gases, and can cause electric shock.

Caution must be exercised when making connections to a battery to avoid shock and contact with the acid, and to prevent any sparking that could lead to an explosion.

ALWAYS follow the safety instructions and steps listed below i*n exact sequence* when connecting the sprayer's remote switch to the battery terminals.

1. Preparatory safety	**Preparatory safety steps:** • ALWAYS use eye protection • NEVER smoke or work near sparks or other sources of ignition. • NEVER touch both battery terminals at the same time or with any non-insulated tools. • If battery acid contacts skin or clothing, flush immediately with water and neutralize with baking soda.
2. Connect remote switch to battery	**Connect the sprayer's remote switch to the vehicle battery using the following procedure:** a) Disconnect the vehicle battery ground wire. b) Connect the remote switch's ***red*** battery clamp to the ***positive*** **(+)** terminal of the battery. c) Connect the remote switch's ***black*** battery clamp to the ***negative*** **(-)** terminal of the battery. d) Reconnect the vehicle battery ground wire. **WARNING:** Always connect in this sequence to avoid possible shock.
3. Connect remote switch to pump power cord	**Connect the remote switch to the pump power cord:** Note: Make sure the power switch is in the OFF position on the remote switch. 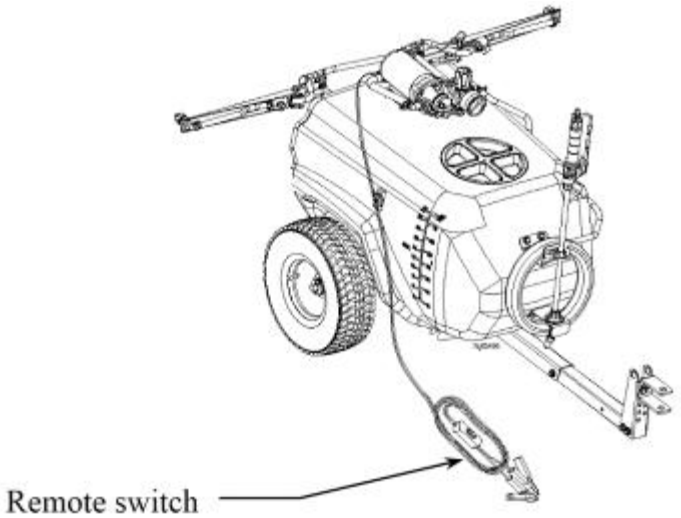

4. Verify connection	**Verify a complete connection has been made** by checking with a DC voltmeter, or by *briefly* turning the remote switch to the ON position and listening for pump activation.
5. Attach remote switch to vehicle	**Using supplied Hook & Loop pad, affix remote switch to vehicle in a position that is easily reached from the driver's seat.**
6. Disconnect after use	**AFTER EACH USE, disconnect power to the sprayer** by disconnecting the sprayer's pump cord from the remote switch – *the remote switch may remain connected to the battery.* *NOTE: It is important to disconnect power to the sprayer when not in use for safety reasons. ALWAYS verify that the power has been disconnected or the remote switch is in the OFF position before adding chemicals or servicing.*
7. To disconnect permanently	**When it is necessary to disconnect the sprayer's remote switch from the battery, use the following procedure:** 1. Disconnect sprayer's pump cord from the remote switch. 2. Disconnect the remote switch from the vehicle battery as follows: a) Disconnect vehicle battery ground wire. b) Disconnect the remote switch's *black* battery clamp from the *negative (-)* terminal of the vehicle battery. c) Disconnect the remote switch's *red* battery clamp from the *positive (+)* terminal of the vehicle battery. d) Reconnect the vehicle battery ground wire. **WARNING:** Always disconnect in this sequence to avoid possible shock. *(Remember that on some vehicle models, you may need to remove the sprayer to access the battery)*

Step Seventeen: Check and test completed assembly.

⚠ WARNING

Check and test completed assembly

Serious injury could result from chemical leaks if sprayer is improperly assembled or the design of the sprayer is modified.
Follow the steps below to ensure the sprayer is properly assembled. Never modify the sprayer design.

1. Check assembly	**Check assembly to assure the sprayer is properly assembled and in safe working condition:** a) Check that the gun clip screws are tight, hose clamps are secure, and bolts/nuts are properly fastened. b) While it is unlikely that factory assembled components become loose, they should also be checked to make sure they are tight.

2. Test with water	**Test the system for leaks with water:** a) Fill the tank with water. b) Connect the remote switch to the pump power cord and turn the remote switch ON. The pump is an "on demand" pump. When turned on, the pump will prime itself, and then turn off. When the gun trigger is squeezed, the pump will automatically start. c) Operate the spray gun by squeezing the gun trigger. d) Check for leaks throughout the system. If a leak is detected, fix the leak and re-test the system with water until no leaks are detected.

Machine Components

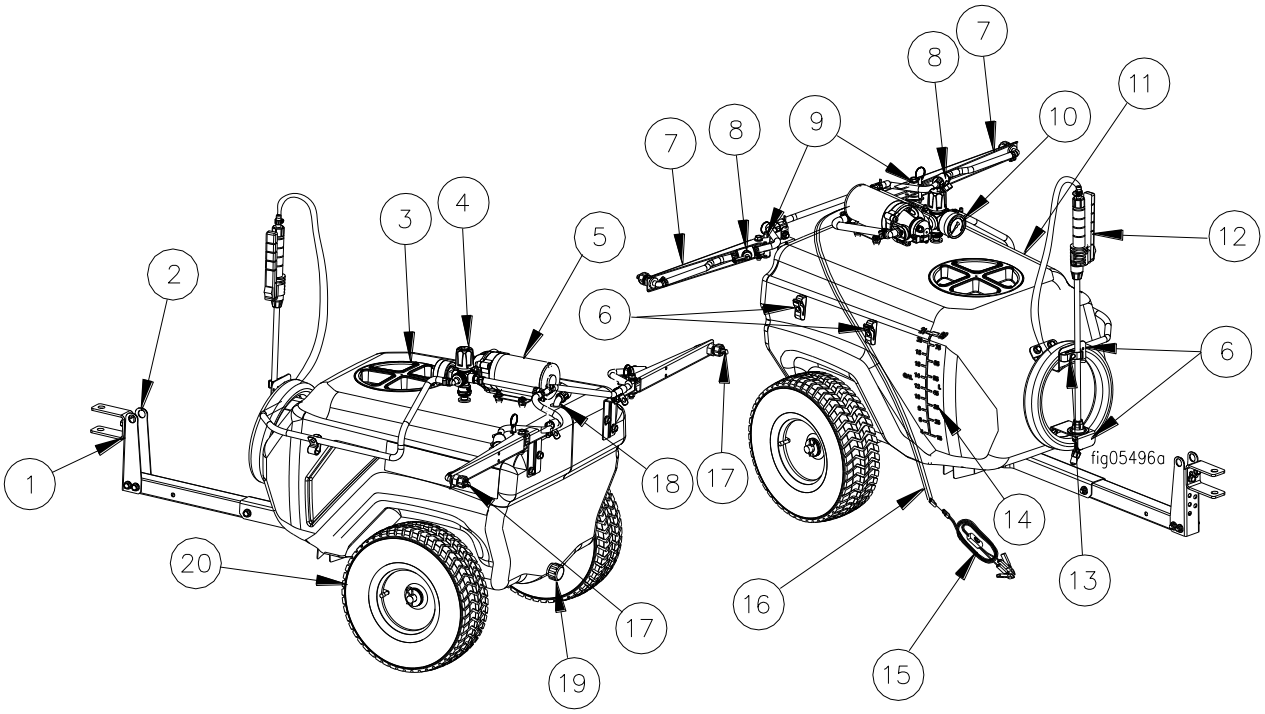

1. **Hitch Bracket:** The hitch mount connects the vehicle hitch to the sprayer.
2. **Axle Storage Location:** Place axle in this location for compact storage
3. **Fill Cap:** The fill cap has a vent to allow air to enter the tank as the chemical is dispensed.
4. **Pressure Regulator:** This controls system pressure.
5. **Pump:** The sprayer pump makes the chemical flow to the spray gun and the nozzle.
6. **Gun Clips:** Use the gun clips to store the spray gun.
7. **Broadcast Boom Arm:** The boom arm holds the nozzle. They fold for easy storage.
8. **Broadcast Boom Valves:** The boom valves shut off chemical to the left, right, or both boom nozzles.
9. **Broadcast Boom Arm Pivot:** The pivot allows the boom arms to fold up for easy storage and breakaway when struck while towing.
10. **Pressure Gauge:** The pressure gauge is an indicator of the pressure in the system.
11. **Sprayer Tank:** The sprayer tank holds the chemical.
12. **Spot Spray Gun:** Use the spray gun to apply chemical to specific areas.
13. **On Board Hose Storage:** The built-in hose wrap provides a storage location for the gun hose on the tank.
14. **Fill Marks/Volume Guide:** this mark the fluid capacity (Litres & Gallons)
15. **Remote Power Switch:** The remote switch connects the battery to the pump power cord and allows the operator to turn the sprayer pump on and off.
16. **Pump Power Cord:** The pump power cord connects the remote switch to the pump.
17. **Broadcast Nozzles:** The nozzles meter and distribute the chemical to a large area.
18. **Suction Tube:** The suction tube is the inlet line for the pump. The suction tube has a suction strainer to prevent debris from entering the pump.
19. **Drain Cap:** Remove drain cap to empty tank of fluid.
20. **Tyres:** The tyres have a wide tread to prevent turf damage.

Operation – Important Safety Information

Now that you have completed and tested your assembly, there is some important safety and health information you need to know with regard to handling and spraying chemicals, as well as vehicle handling with the sprayer attached.

⚠ WARNING

Carefully read and make sure you understand the following safety information before using the sprayer.

General Chemical Safety:

⚠ WARNING

Pesticides are hazardous chemicals.

Heed the warnings below and follow all instructions carefully.

Improper handling of chemicals can result in serious injury or illness, or cause damage to the environment.

- **Chemical label**. ALWAYS READ and FOLLOW all chemical label instructions.
- **Licensing/regulation**. Refer to any applicable licensing restrictions or state/federal regulations with regard to the application of the particular chemical you plan to use.
- **Emergency procedures**. Before handling chemicals, carefully review the "Chemical Accident Procedures" listed later in this section, as well as the "Statement of Practical Treatment" on the chemical label.
- **Inhalation/contact**. ALWAYS take precautions to avoid inhaling or coming into contact with the chemical.
- **Personal protective equipment**. ALWAYS wear protective clothing, eye protection, and chemical-resistant gloves when filling, using and cleaning the sprayer. Wear additional protective gear (such as facemask or apron) as recommended on the chemical label.
- **Children/pets**. Pesticides can be especially toxic to children and animals. ALWAYS exercise extra caution around children. Keep sprayer and all spray materials away from children and animals.
- **Ventilation**. ALWAYS ensure there is adequate ventilation when mixing, pouring, or spraying.
- **Flammables**. NEVER use any flammable chemicals in the sprayer.
- **Corrosives**. DO NOT use corrosive chemicals in the sprayer. They can weaken the sprayer and its parts, resulting in leaks. Check with the chemical manufacturer to ensure chemical is compatible with all components of the sprayer.
- **Chemical interaction**. ALWAYS flush the sprayer before switching chemicals. Different chemicals may interact dangerously with each other.
- **Chemical storage**. ALWAYS store pesticides in a properly labeled container and in a secure location per the manufacturer's recommendations.
- **Health monitoring**. Monitor the health of operators who are frequently exposed to pesticides, as recommended by the chemical label or local/federal regulations.

Operation – Important Safety Information

Chemical Application Safety:

⚠ WARNING

Caution must be used when spraying chemicals to avoid unsafe exposure to humans and the environment.

Heed the warnings below and follow all instructions carefully.

Before Spraying

- **Sprayer prep**. ALWAYS inspect and prepare the sprayer before use according to the directions provided in this manual.
- **Keep sprayer off**. Do not turn on power to the sprayer until ready to spray in order to avoid unintentional spray release.
- **Broadcast nozzle down**. Make sure broadcast nozzle is oriented to spray straight down before starting the sprayer. An incorrectly positioned broadcast nozzle may spray chemicals on you or others
- **Wind speed**. NEVER spray when wind speed exceeds 6.5 KMPH in order to minimize spray drift.
- **Clear area/post**. ALWAYS keep the work area clear of people and pets. POST warning notices to restrict access by the public for the period recommended on chemical label.
- **Operator age**. You must be 16 years of age or older to operate this sprayer. Pesticides are especially toxic to children.

During Spraying

- **Over application**. DO NOT over apply pesticide. Apply at a rate recommended by chemical manufacturer. Excess pesticide can be dangerous to humans, damage desirable plants, and contaminate soil and water sources.
- **Never point gun**. NEVER point the spray gun at people or animals.
- **Children/pets**. ALWAYS exercise extra caution when spraying near areas accessible to children and pets.
- **Eating/smoking**. DO NOT eat, drink, smoke, rub your eyes, or touch any part of your bare skin while handling chemicals and spraying.
- **Heat/flames**. DO NOT spray near open flames or sources of heat.
- **Spills**. ALWAYS clean up spills immediately per instructions on the chemical label.
- **Unattended**. ALWAYS turn off vehicle and set brake or block wheels, turn off power to sprayer, and relieve system pressure before leaving sprayer unattended.
- **Troubleshooting**. ALWAYS refer to the safety instructions in the Troubleshooting Section before attempting any repairs.

After Spraying

- **Clean sprayer**. ALWAYS clean the sprayer immediately after use according to the directions provided in this manual.
- **Decontaminate**. ALWAYS decontaminate yourself immediately after you are finished spraying and handling chemicals. Wash all exposed areas of the body with soap and water and remove and launder clothing.
- **Chemical disposal/storage**. ALWAYS dispose of or store remaining chemicals properly as recommended on the chemical label.

Operation – Important Safety Information

Towing/hauling Safety:

⚠ WARNING

The filled sprayer is very heavy. It can crush and cause serious injury if it rolls out of control or tips over.

Follow the instructions below for safely towing the sprayer.

- **Read vehicle instructions**. Review towing safety instructions in your towing/hauling vehicle manual.
- **Driver age.** In Australia, you must be 16 years of age or older to operate the towing/hauling vehicle with the sprayer attached. Check local laws prior to use.
- **Securely attached**. Be sure sprayer is securely attached to the towing/hauling vehicle.
- **Tyres**. Make sure sprayer tyres are fully inflated and in good repair before towing. Do not over inflate. Serious injury could occur if tyre explodes.
- **Vehicle handling.** Be aware that vehicle handling will be affected when towing the filled sprayer. Exercise caution to avoid loss of control or sprayer overturning:
  - **Keep speed to a minimum** so you can maintain control at all times. Reduce speed prior to turns.
  - **Allow for wider turns** and for **more distance to stop**.
  - **Avoid any sudden** steering maneuvers, starts, or stops that could create sway.
- **Rough or sloped terrain**. Slow down and exercise extra caution on rough or sloped terrain in order to reduce risk of rollover. Pick the most level route possible when transporting across fields. Drive up and down slopes that cannot be avoided, rather than across. Use a vehicle equipped with a Roll Over Protection System (ROPS) if you will be operating on non-level terrain.
- **BE AWARE of the added length of the sprayer and that visibility may be reduced** when making turns or backing up.
- **Ride / transport.** Never ride or transport cargo on the sprayer.
- **Under the influence**. Never tow or operate this sprayer while under the influence of alcohol, drugs, or medication
- **On public roads.** If towing on a public road, make sure to comply with all local, state, and federal towing requirements. It is the sole responsibility of the purchaser to obtain licensing, trailer lights, safety chains or signage as needed to comply.
- **Unattended**. Turn off both the sprayer and the vehicle, and set the brake or block the wheels, before leaving the sprayer unattended.

Chemical accident procedures:

⚠ WARNING

Before you fill the sprayer, review the following information with regard to handling accidents.

Chemical spills, sprayer leaks, personal contamination, and poisoning are accident situations which you may encounter. **All require an immediate response – See instructions below.**

Operation – Important Safety Information

Sprayer leak	**In the event that the sprayer develops a leak while spraying chemicals, you must *immediately stop spraying*.** Turn off power to the sprayer and follow the directions below, as applicable.
Bodily chemical contact	**Personal contamination can occur when chemicals splash, spill, or spray directly onto a person.** 1. Follow the emergency first aid instructions on the chemical label listed in the "First Aid" or "Statements of Practical Treatment" section. General procedures include: a) Eyes – immediately flush with water or follow other directions as specified on the chemical label. b) Skin – immediately wash all contaminated skin surfaces with soap and water, or follow directions as specified on the chemical label. c) Clothing – remove contaminated clothing immediately. Dispose of heavily contaminated clothing per the instructions on the chemical label for safe chemical/container disposal. 2. Seek medical advice if instructed on the label, or if the victim experiences symptoms of harmful effects such as burning, swelling, nausea, chest pain, difficulty breathing, dizziness or confusion. When seeking medical advice, be sure to bring the chemical product label.
Poisoning by ingestion or inhalation	**In case of poisoning from ingestion or inhalation**: IF THE VICTIM HAS COLLAPSED OR IS NOT BREATHING, ***CALL 000***. Otherwise: 1. If you are the victim, immediately seek assistance from nearby personnel because you may become incapacitated. 2. Follow the emergency first aid instructions on the chemical label in the "First Aid" or "Statement of Practical Treatment" section. 3. Call a poison control center for further advice. Have the chemical label available for reference. **In Australia. Call 13 11 26.**
Chemical spills	**Chemical spills must be quickly contained and properly cleaned up.** Refer to the chemical label for any specific clean-up instructions with regard to the chemical spilled. General procedures include: 1. **Control** the spill by stopping the source of the spill. If the source of the spill is a container leak, place the leaking container in a larger, watertight container. Keep unprotected people away from the spill site. 2. **Contain** the spill so that it does not spread and get into water sources. Use a shovel or other tool to make a dike around the spill with soil, sod, or absorbent material. 3. **Clean up** the spill immediately -- Absorbent materials like ground corncobs or pet litter should be spread on the spill area to soak up the pesticide. The contaminated material should then be shoveled into a leak proof container. Do not flush the spill area with water until you receive advice as directed below. 4. **Seek additional advice** from the chemical manufacturer and your state's pesticide regulatory agency regarding decontamination of the spill site: - *Chemical manufacturer*. The chemical label provides contact information for the chemical manufacturer. - Call a poison control center for further advice**.** Have the chemical label available for reference.

Operation – Preparing the Sprayer for Each Use

If the sprayer has been used previously, it must be prepared BEFORE EACH SUBSEQUENT USE.

⚠ WARNING

Read instructions below carefully for inspecting and preparing the sprayer.

Damaged or clogged equipment could result in leaks or uncontrolled spray.

Leaks could result in injury to the operator or bystanders from chemical exposure, or cause damage to the environment.

Important safety rules:

- **Power off.** Make sure all power is OFF before cleaning, inspecting, or servicing the sprayer.
- **Replacement parts.** If a part needs replacement, only use parts that meet the manufacturer's specifications. Replacement parts that do not meet specifications may result in a safety hazard or poor operation of the sprayer.

1. Ensure sprayer attached	**Ensure the sprayer is securely attached to the vehicle.**
2. Ensure tank empty	**Ensure the sprayer has been thoroughly flushed and drained of all residual chemical from prior uses.**
3. Clean suction strainer	**Clean the suction strainer of any chemical residue.** It is important to clean the suction strainer before each use to ensure it is not clogged and to prevent residual chemical from contaminating sprayer contents. **IMPORTANT:** The strainer must be accessed by reaching into the tank, so the *tank must be empty* to avoid immersing your hand in chemicals. a) Open fill cap on top of tank. b) USING RUBBER GLOVES, reach into the tank and pull the suction strainer off the end of the suction tube. (See figure below.) c) Run the suction strainer under fresh water to remove debris. d) Replace the suction strainer onto the end of the suction tube. **Fill cap** 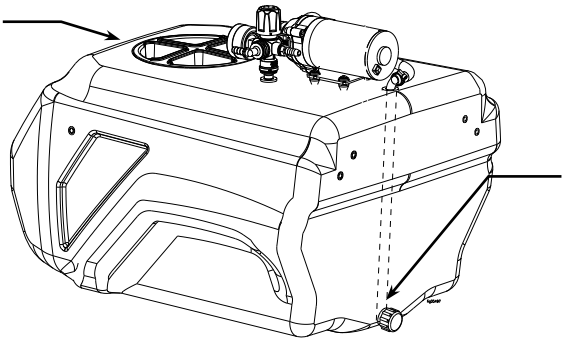 Suction strainer (Inside tank)
4. Inspect & repair	**Inspect and test the sprayer thoroughly**: a) Inspect hoses for exposed mesh and holes. Replace all worn or damaged hoses. b) Inspect tank and fittings for cracks and leaks. Replace all damaged fittings with original Kincrome parts. c) Check to be sure retaining nut on gun nozzle is tight. d) Check to be sure all other nuts, bolts, and screws are tight. e) Prior to use, make sure wheel are assembled correctly and tyres are inflated. f) *Partially fill tank with plain water and spray to test for leaks*. Repair as needed. ***IMPORTANT: After any repair work has been done, ALWAYS test for leaks with water one final time before using.***

Operation – Preparing the Sprayer for Each Use

Step One: Assess wind conditions and clear work area.

Before you decide to spray, you must determine whether wind conditions are suitable. You must also restrict access to the work area to ensure the safety of bystanders.

⚠ WARNING

Do not spray if wind speeds are greater than 6.5 km/h or if there are bystanders in the intended spray area.

1. Assess wind speed	**Assess weather conditions to ensure that it is not too windy to spray.** **DO NOT SPRAY if wind speeds are greater than 6.5 km/h.** *Visible indication of wind speed*: If leaves are in constant motion or there is any branch movement, DO NOT spray because the wind is too strong.
2. Clear work area	**Clear the work area of all bystanders and pets.** Restrict access by the public for the period recommended on chemical label.

Step Two: Fill the sprayer.

⚠ WARNING

ALWAYS wear personal protective equipment as directed on the chemical label when handling pesticides.

Long pants and sleeves, chemical resistant gloves, and eye protection are strongly recommended. Additional protective gear may be required depending on the particular pesticide.
The motor surface temperature can reach temperatures over 70° C. In order to avoid scalding, wear gloves during operation of the sprayer.

Fill the sprayer using the following steps:

1. Review safety information	**Review the "Operation – Important Safety Information"** related to General Chemical Safety and Chemical Accident Procedures provided in this manual.
2. Choose safe mixing/ loading area	**Choose a safe pesticide mixing and loading area.** - Choose an outdoor, well-ventilated area away from unprotected people, animals, food, and other items that might become contaminated.
3. Wear personal protective equipment	**Wear personal protective equipment as directed on the chemical label.** - Note that additional equipment may be specified for mixing and loading activities.
4. Turn off sprayer and vehicle	**Turn OFF power to the sprayer before filling.** - The vehicle should also be off, with brake set or wheels blocked to prevent unintended movement.
5. Remove fill cap	**Remove the fill cap located on top of the sprayer.** 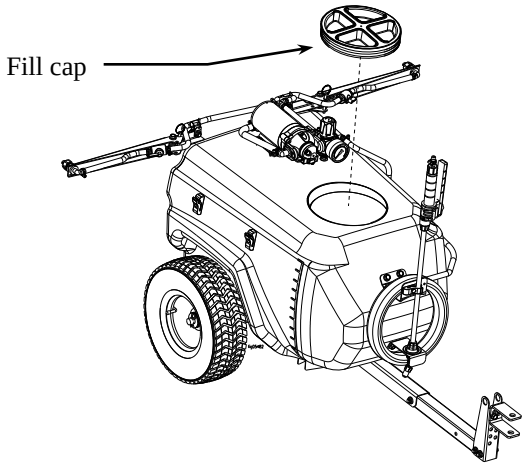
6. Ensure tank flushed	**Ensure tank is flushed of all chemicals from prior uses**. - Chemicals can interact dangerously when mixed, and residue chemicals are also a health hazard.

Operation – Using the Sprayer

7. Check drain cap	**Before filling tank, ensure drain cap is securely tightened.** 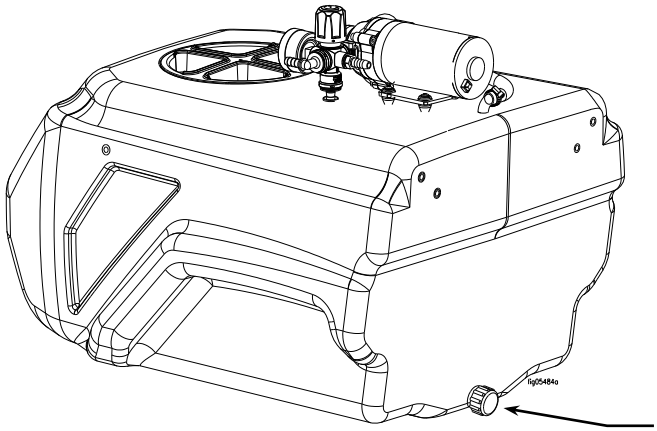 Drain cap
8. Fill tank	**Add pesticide to tank through fill cap:** a) Confirm the chemical/water dilution ratios specified on the chemical label. b) Determine chemical and water volumes needed for the planned application, taking into consideration that maximum tank capacity is 117 litres. *<u>Note</u>: Only purchase and mix as much chemical as you need for the planned application in order to minimize chemical over application and the need for storing unused chemicals.* c) Add chemical to the tank through the fill cap. *If the chemical is not pre-mixed, add water and pesticide concentrate in the order prescribed on the label.* 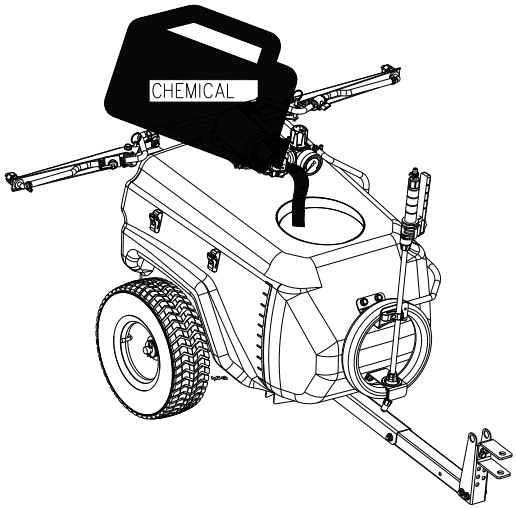
9. Ensure chemical mixed	**Ensure chemical is thoroughly mixed in tank.** - Stirring device should be made of metal or plastic, non-chemical absorbing material, and then properly cleaned and stored after use.
10. Replace fill cap	**Replace fill cap and tighten securely**.

Operation – Using the Sprayer

Step 3: Operate the sprayer.

⚠ WARNING

ALWAYS wear personal protective equipment as directed on the chemical label when spraying.

Long pants and sleeves, chemical-resistant gloves, and eye protection are strongly recommended. Additional protective gear may be required depending on the particular pesticide.

1. Review safety information	**Review the "Operation – Important Safety Information"** related to Chemical Application Safety and ATV Vehicle Handling Safety provided in this manual.
2. Wear personal protective equipment	**Wear personal protective equipment as directed on the chemical label.**
3. Set Cut Off Limit	• With the regulator open, apply proper electrical power and purge pump of air. • Slowly close pressure regulator until the pump begins to cycle (on/off within 2 sec). Adjust the set screw clockwise (raise) or counterclockwise (lower) until the "cut-off" pressure is within 2 psi (using the attached pressure gauge) of the psi indicated on the motor label. • Open the pressure regulator and repeat previous step several times to verify pressure switch adjustment. • If the pressure regulator knob is completely tightened, the pressure setting will be higher than the pressure switch on the pump (70 psi). This allows the pump to operate as a demand pump and turn on only when spraying. When the pressure is set below the pump maximum (70 psi), the pump will continuously run, bypassing fluid back into the tank for agitation. 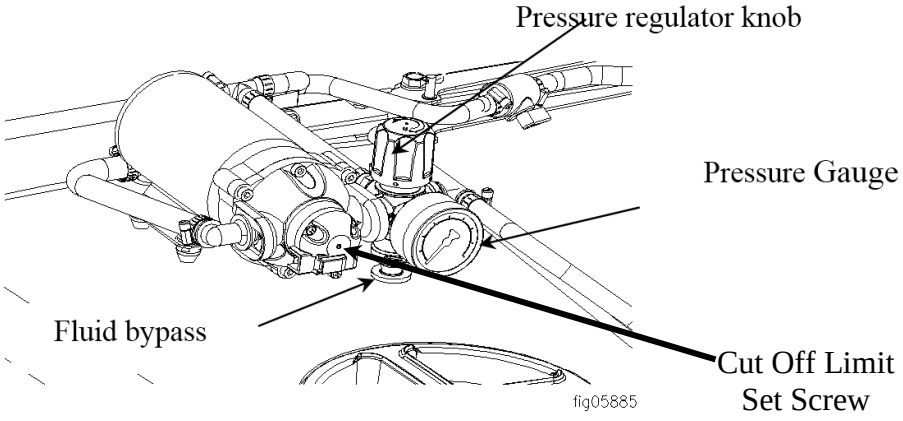

4. Close broadcast/ boom valves

Close broadcast/boom valves to prevent accidental spray release.

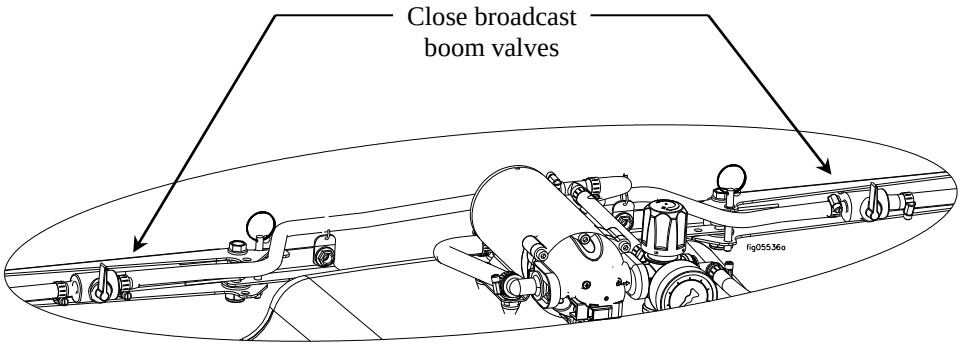

5. Turn on power

Turn on the power to the sprayer.

1. Verify the remote switch is connected to the pump power cord.
2. Turn the remote switch to the "ON" position.

Note: The pump will start automatically when power is turned on.

6. Adjust pressure regulator

Turn pressure regulator knob to adjust outlet pressure

1. Turn knob clockwise to increase pressure.
2. Turn knob counter-clockwise to decrease pressure

Note: If the pressure regulator knob is completely tightened, the pressure setting will be higher than the pressure switch on the pump (70 psi). This allows the pump to operate as a demand pump and turn on only when spraying.

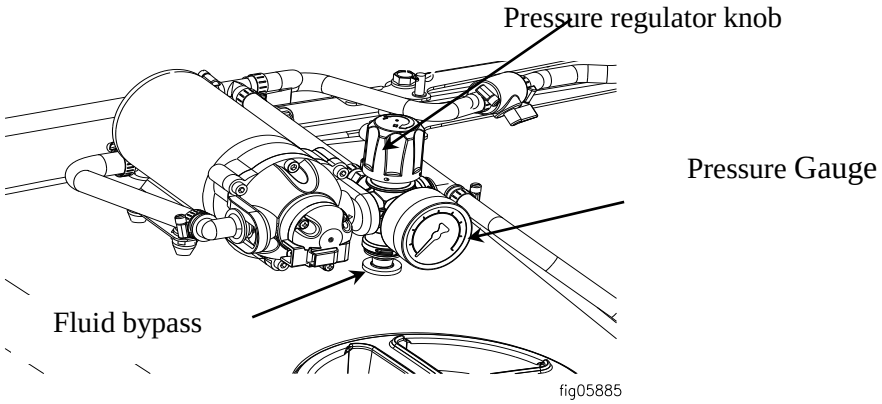

7. Begin agitation if needed	**Some formulations of liquid pesticides do not remain in solution and should be agitated to maintain a uniform mix.** The pressure regulator on this sprayer can be used as an agitator. If the pressure is set below the pump's pressure switch setting (70 psi), the pump will continue to run even when not spraying. Fluid will be diverted through the pressure regulator back to the tank. This bypass fluid will keep the contents of the tank well-mixed, and allow the sprayer to be used with pesticides classified as "flowable" ("F" or "L"), "wetable powder" ("WP" or "W"), "emulsion" ("EC" or "I"), microencapsulated" ("M"), or "water dispersible granules" ("WDG" or "DF")

Operation – Using the Sprayer

8. Squeeze trigger & adjust nozzle

To spray, squeeze the gun trigger.

- Twist the spray nozzle to adjust from a straight stream to hollow cone spray pattern, as recommended on the chemical label for proper delivery rate.

Note: It is not unusual for the operator to be exposed to chemical drips while adjusting the nozzle – gloves should be chemical resistant.

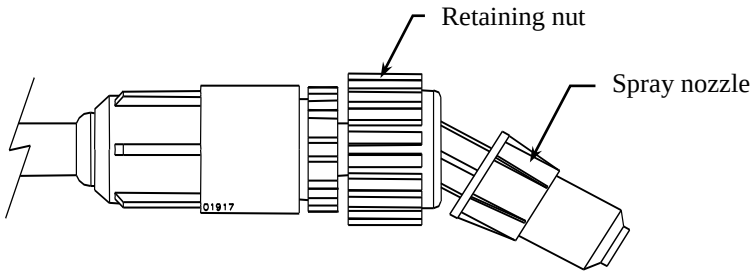

9. Operate broadcast boom

A. Open broadcast boom valves

Open the left, right, or both broadcast boom valves as desired.

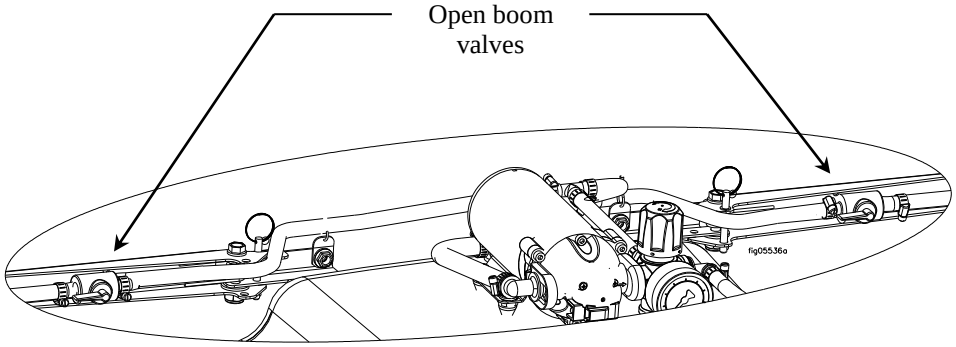

B. Remove pin(s) and unfold one or both broadcast boom arms as required. Reinsert pin(s) to secure boom arms.

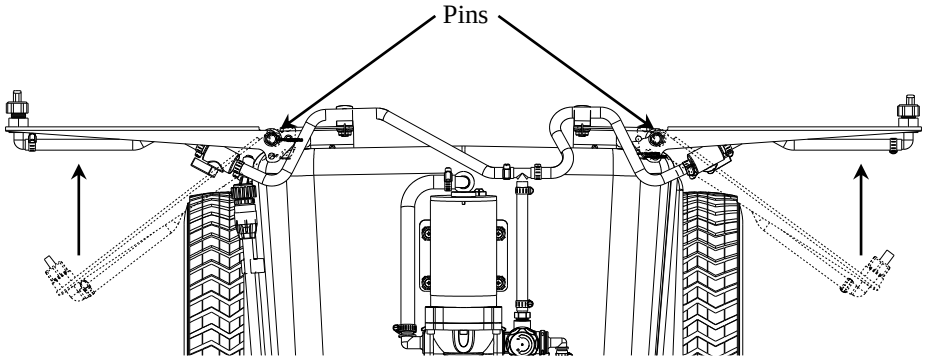

C. Ensure correct spray pattern

Make sure both boom nozzles are pointed toward the ground. If they are not, loosen the nozzle retaining nut, orient the opening of the boom nozzle to point straight down, then retighten the nozzle retaining nut.

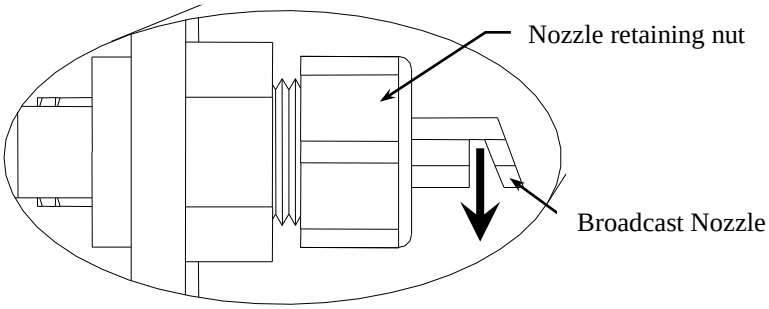

IMPORTANT: Make sure broadcast nozzles are oriented to spray straight down before you start. An incorrectly positioned broadcast nozzle may spray chemicals on you or others.

Note: It is not unusual for the operator to be exposed to chemical drips while adjusting the broadcast nozzle. Chemical resistant gloves should be worn.

D. Ensure uniform coverage

To ensure proper coverage, the height of the unfolded broadcast nozzles should be about 540mm from the ground. The sprayer must be level with the ground to get this height.

The overall spray width is 3048mm, but 1/3 or 1016mm" of the overall spray pattern must be overlapped to get equal coverage throughout the spray area.

Use the tables in Appendix A to determine what speed to drive your vehicle for the desired application rate

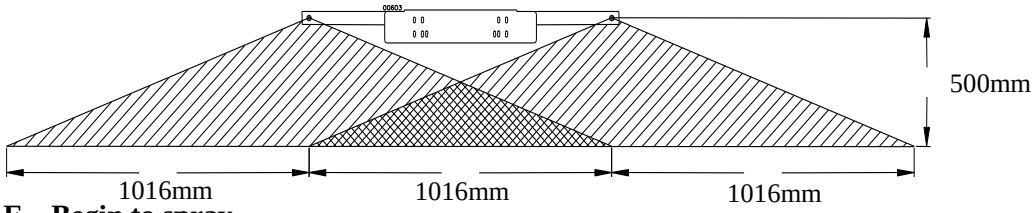

E. Begin to spray

Turn the remote switch ON to begin spraying.

9. Leaving unattended

If the sprayer must be left unattended at any time:

a) Disconnect power to the sprayer.
b) Relieve system pressure by depressing the gun trigger.
c) Turn off the vehicle. Set brake or block the wheels.

10. Discontinue use if clogged or inoperative

If the sprayer becomes clogged or inoperative during use, *discontinue use immediately*.

- DO NOT attempt to service while chemicals are in the sprayer and power is connected.
- Return to service area to review instructions for troubleshooting before attempting to service.

Note: *A reserve, clean container capable of holding 117 litres should be kept for use when the sprayer tank needs to be emptied temporarily for repairs. The container should be properly labeled as to its contents if it is used.*

Step Four: Clean sprayer and decontaminate after use.

When done using the sprayer, it is important to clean the sprayer and decontaminate yourself. Do not store the sprayer with chemicals in the tank, as it is unsafe and could also result in damage to the equipment.

⚠ WARNING

Clean-up and decontamination procedures must be followed after each use.

Improper equipment clean-up and disposal of chemicals can result in dangerous chemical exposure to humans and the environment, as well as equipment damage.

Personal decontamination is required after spraying to minimize unsafe exposure to chemicals and potential illness.

1. Drain tank	**If there is excess pesticide left in the tank, drain the tank:** a) Disconnect power to the sprayer and relieve system pressure by depressing the gun trigger. b) Find a suitable container in which to drain the unused pesticide. Place it under the tank drain hole. c) While wearing rubber gloves, eye protection, and all other required personal protective equipment, remove the drain cap and allow pesticide to drain into container. d) When tank stops draining, replace drain cap. Tighten securely.
2. Unused chemical	**Properly store or dispose of unused chemical:** a) If the unused pesticide is to be stored for future use: Store all unused pesticide in its original, or a suitably marked, container in a secure location out of the reach of children & animals. b) If remaining pesticide is to be disposed: Properly dispose of the remaining chemical and its container per the chemical manufacturer's recommendation and according to local hazardous waste disposal regulations.
3. Flush sprayer	**Flush the sprayer per the chemical manufacturer's recommendations.** A general procedure is as follows: a) Add fresh water to the tank. b) Reconnect power to the sprayer. c) Operate the spray gun and discharge all rinse water onto an area that can accept dilute pesticide application. d) Add 19 litres of the chemical manufacturer's recommended cleaning solution. Operate the spray gun, collecting the discharged solution if recommended by the manufacturer. e) After flushing, disconnect power to the sprayer and be sure all system pressure is relieved by squeezing the gun trigger. f) Dispose of cleaning solution discharge as recommended by the manufacturer of the solution.
4. Decontaminate & launder	**Decontaminate yourself after you are finished handling chemicals:** a) Remove all clothing worn during spraying and chemical handling. b) Wash all exposed parts of the body with soap and water. c) Launder clothing separately from other wash.

Storage

Prepare the sprayer for end-of-season storage by running RV antifreeze through the system. This will keep internal parts lubricated, protect against corrosion, and keep the unit from freezing.

CAUTION
The sprayer will be damaged if it freezes. Protect the sprayer from freezing during storage by following the instructions below.

Preparing for storage:

1. Add antifreeze	Pour 4 litres of Propylene Glycol based antifreeze into the tank. **Some antifreeze contain Ethanol (which is alcohol based and highly flammable.) which should not be used.**
2. Spray briefly	Turn on the pump motor and squeeze the gun trigger briefly until fluid sprays. Store gun in lance clips.

Preparing Cart for storage:

1. Remove bolts and nuts	Remove bolts and nuts from tow bar. 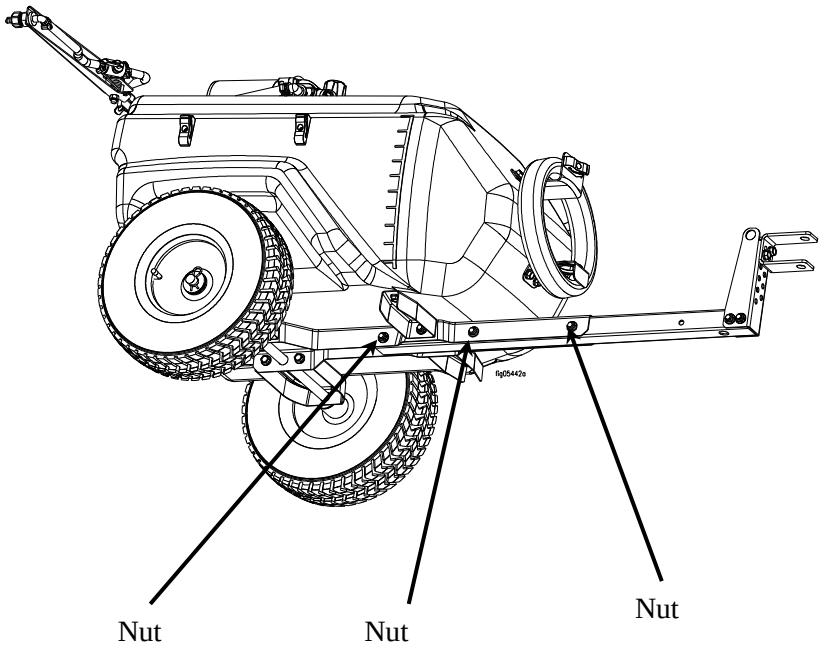

2. Adjust tow bar	Slide tow bar towards axle until bolt holes line up. Insert bolts and tighten nuts. 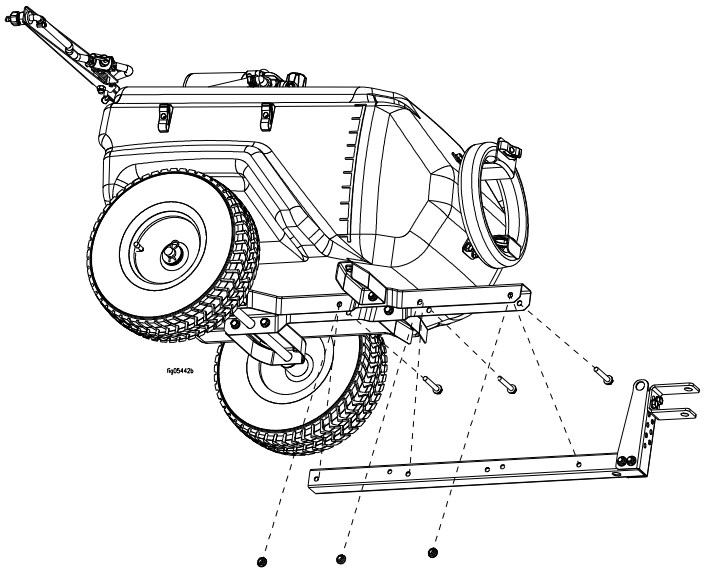
3. Secure with bolts and nuts	Insert bolts and tighten nuts. 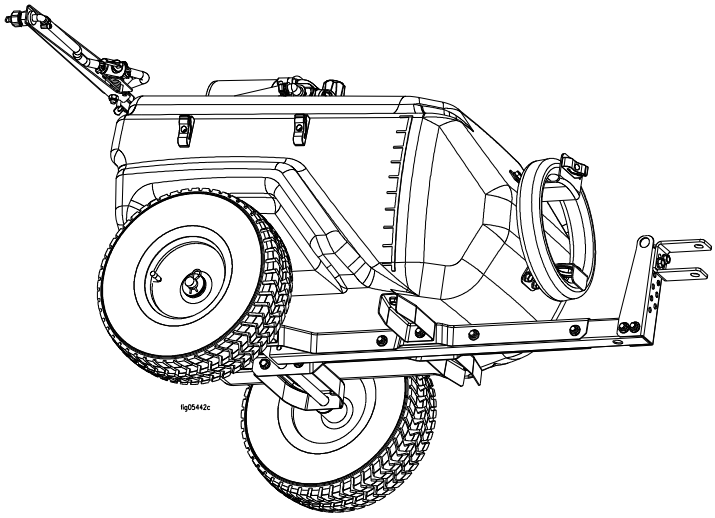

Storage

4. Remove tow bar and wheels	Remove hair pins and washers. Slide wheels off the axle and then remove the axle from the cart. 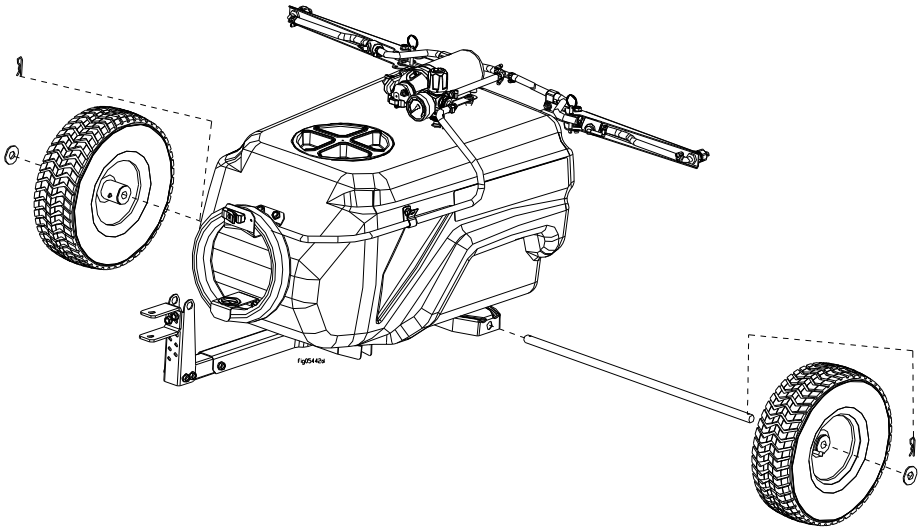
5. Insert into hitch bracket	Insert axle into hitch bracket. Install wheels and washers, secure with hair pins. 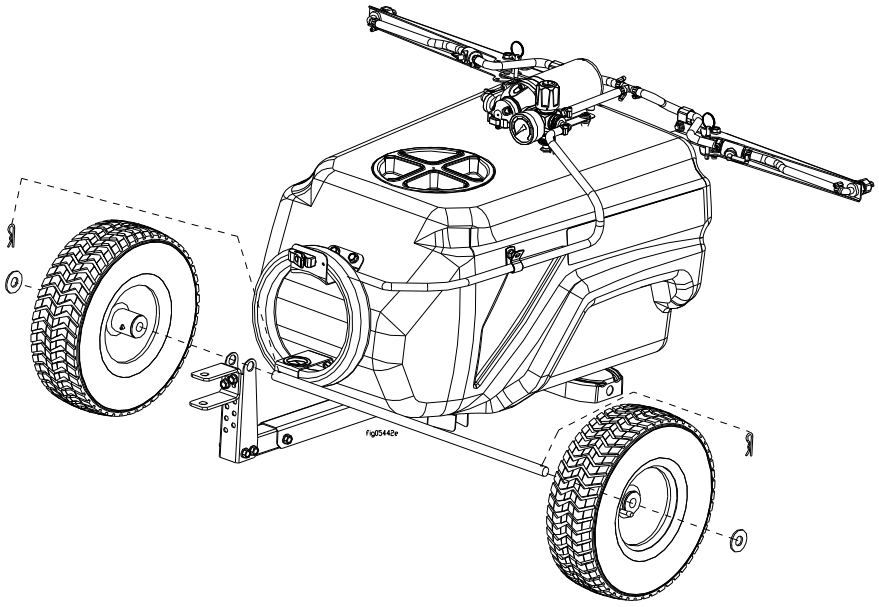

Storage

6. Wheels in storage position	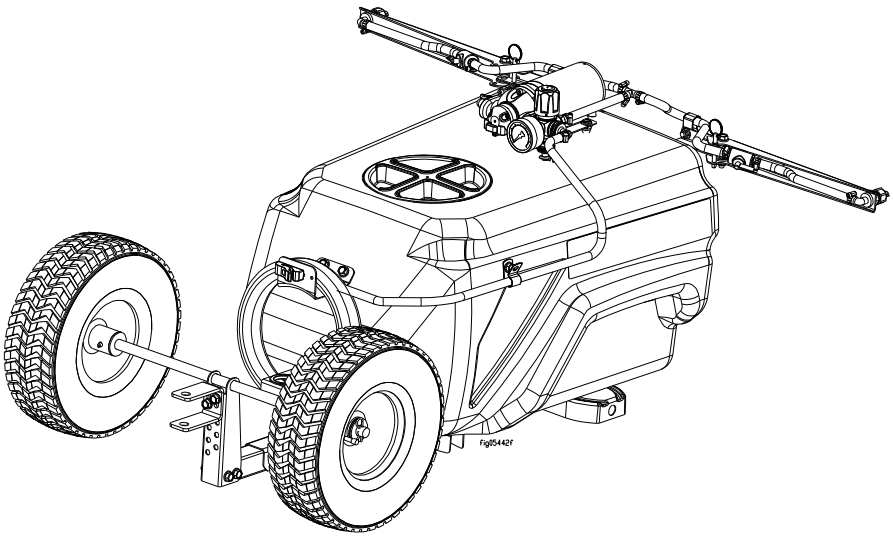
7. Remove boom arm pins	Remove pins from boom arms. *Caution: Boom arms are spring loaded. When the pin is removed, the boom arms will want to swing towards the front of the sprayer. Retain boom arm with hand before removing pin.* 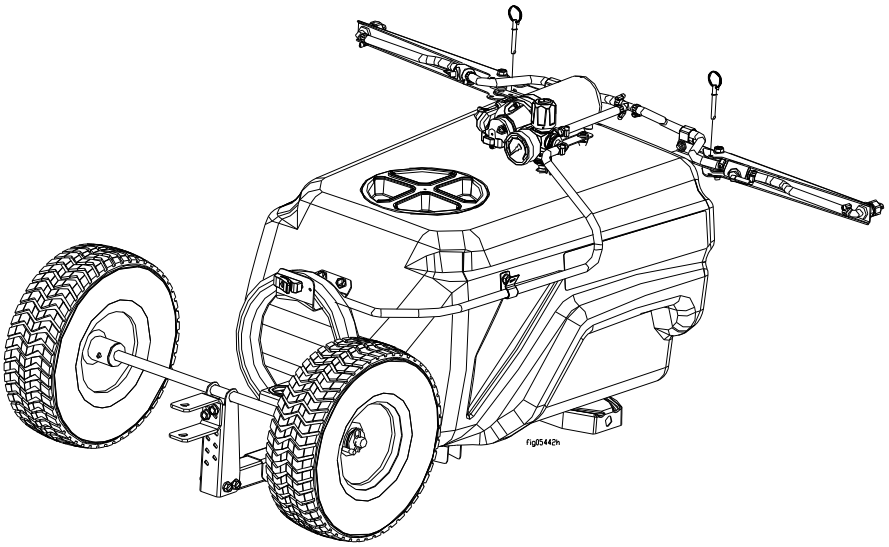

Storage

8. Boom arm storage position	Rotate each boom arm towards the front to its storage position. 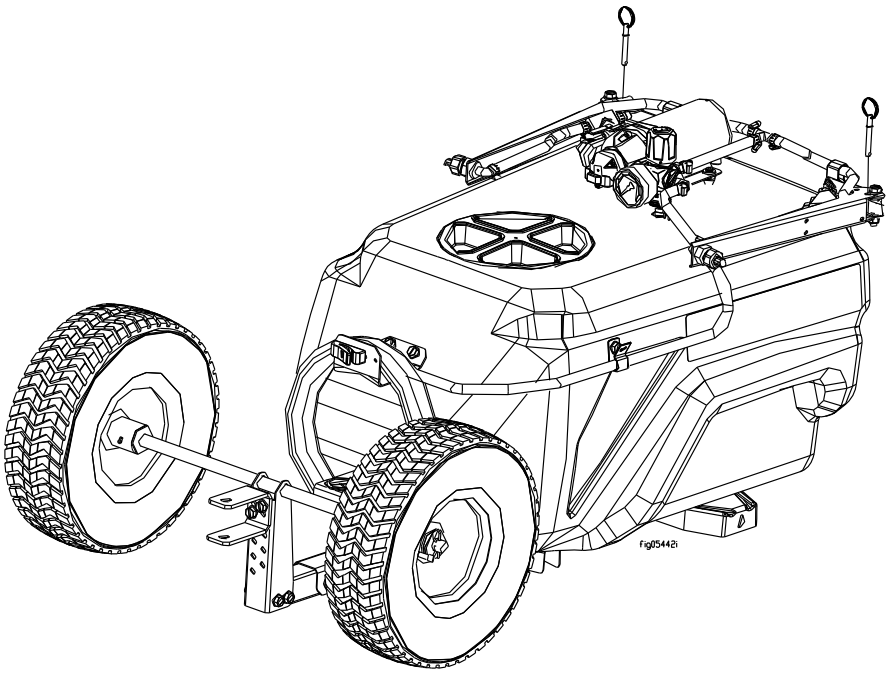
9. Insert boom arm pins	Lock boom arms into their storage position by inserting boom arm pins. 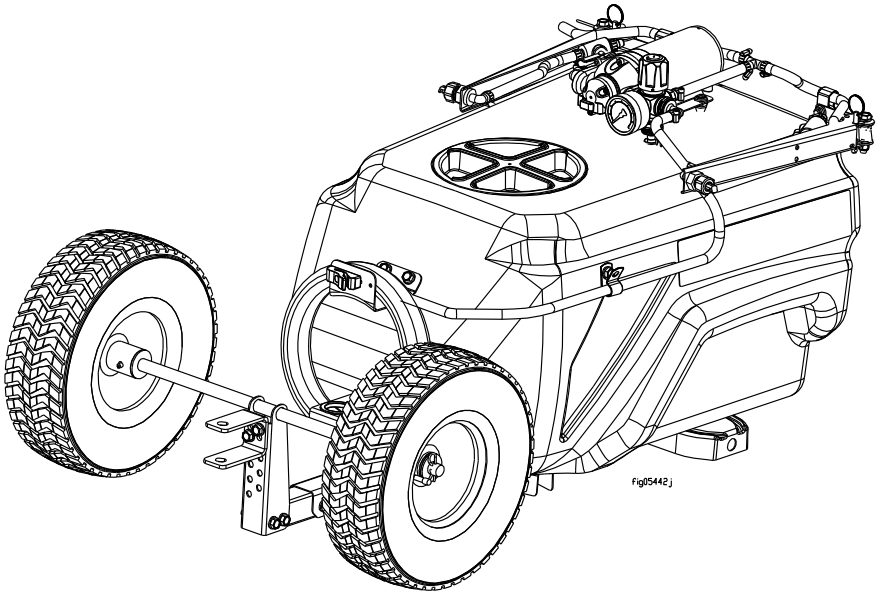

Storage

10. Optional: Hang sprayer on wall	Located on the underside of the tow bar is a mounting hole that can be used to hang the sprayer on a wall. *Note: Hook is not included, hook is supplied by customer.*

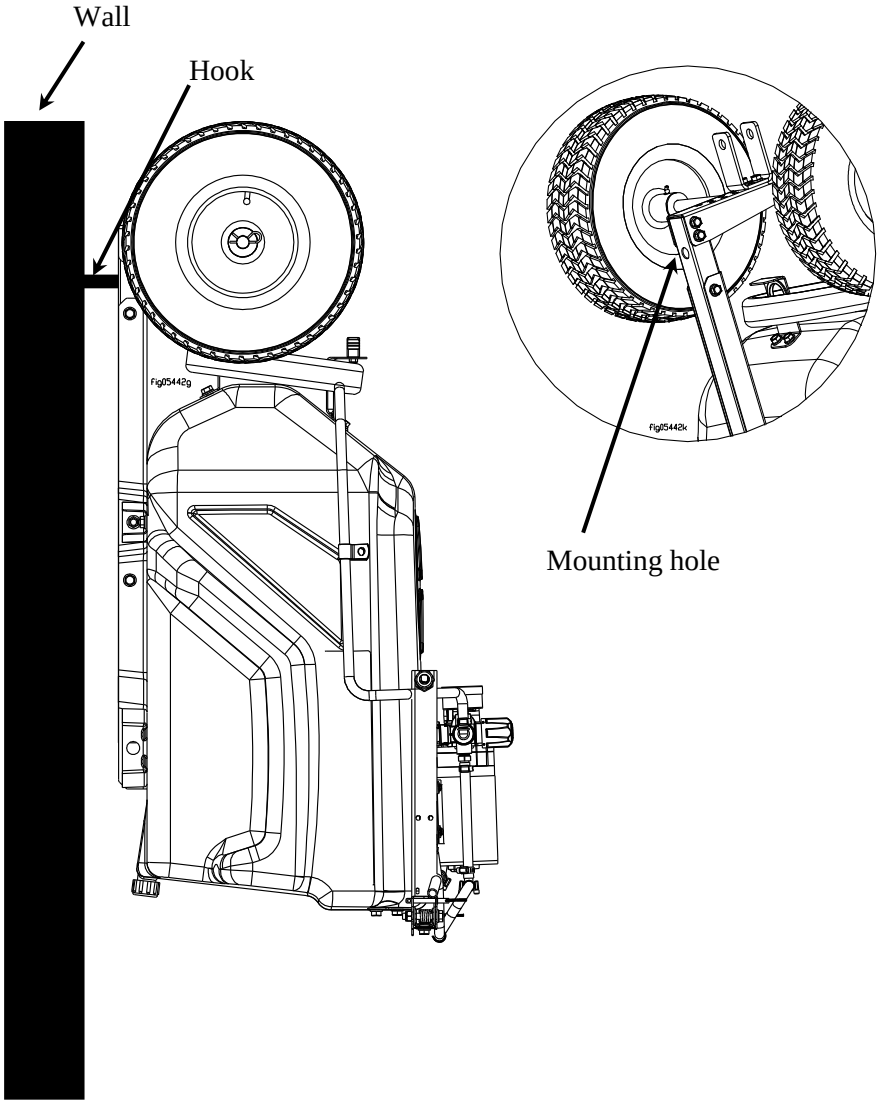

<u>Removing from storage</u>:

1. Drain	Drain the antifreeze left in the tank through the tank drain hole into a suitable container.
2. Flush with water	Fill the tank with fresh water and run through the system. Operate the spray gun until the system is completely flushed. Be sure to set up containers to capture the antifreeze flush water.
3. Disposal	Dispose of the antifreeze and flush water properly.

Troubleshooting

⚠ WARNING

Before troubleshooting or attempting to service, read the following safety rules to avoid accidental exposure to chemical and also risk of electric shock.

Note: *A reserve, clean container capable of holding 117 litres should be kept for use when the sprayer tank needs to be emptied temporarily for repairs. The container should be properly labeled as to its contents if it is used.*

Before attempting to service the sprayer:

1. Personal protective equipment	**Wear personal protective equipment as directed on the chemical label while servicing your sprayer.**
2. Review troubleshooting table	**Review the Troubleshooting Table below for the type of problem you are experiencing.** However, DO NOT attempt to repair until the steps listed below are followed.
3. Empty and flush	**If the cause listed for your problem is Clogged intake tube, Clogged suction strainer, or Worn spray gun nozzle:** empty the tank and flush the sprayer with water as directed in the section, "Operation – Step Four". *- In order to avoid accidental exposure to chemicals, never attempt to unclog the intake tube or suction strainer, or service the spray gun nozzle, until the tank has been emptied and the sprayer flushed with water.*
4. Disconnect power/relieve pressure	**Disconnect power to the sprayer and be sure all system pressure is relieved by squeezing the gun trigger.**
5. Perform repairs	**Follow the directions provided in the troubleshooting table to repair the sprayer.** *NOTE: Never try to unclog the sprayer nozzle by blowing through it.*
6. Test after servicing	**After servicing, ALWAYS test the sprayer for leaks with plain water before using.**

PROBLEM	CAUSE	SOLUTION
Pump will not turn on	Bad electrical connection	Check battery connections
	Fuse blown	Replace fuse
	Short in wires	Check condition of wires
	Low voltage	Check voltage
Low pressure	Worn spray gun nozzle	Replace spray gun
	Worn broadcast nozzle	Replace broadcast nozzle
	Pressure set too low	Adjust pressure regulator
	Leaking fitting/Hose	Check for leaks and tighten leaking fittings.
Low flow	Clogged intake tube	Remove obstruction
	Clogged suction strainer Incorrectly set regulator	Clean suction strainer Adjust regulator pressure.
	Pressure set too low	Adjust pressure regulator
	Low voltage	Check voltage
Poor spray distribution	Clogged intake tube	Remove obstruction
	Suction strainer clogged	Clean suction strainer
	Worn spray gun nozzle Too low a pressure.	Replace spray gun Set correct pressure.
Pump cycles while not spraying	Leak in the system Pressure set to low and bypassing.	Tighten leaking hose clamps or fittings, replace spray gun. Set correct pressure.

Specifications

Electrical System Requirements	
Electrical connection	12 VDC
Amp draw from pump	8 Amps
Sprayer Specifications	
Maximum LPM	8.3 Litres/min
Maximum Pressure	70 PSI (4.8 Bar)
Tank Maximum Capacity	117 Litres
Overall Dimensions	
Length:	115cm (drain plug to edge of hitch)
Width:	66cm (wheel to wheel)
Height:	74cm (ground to top of pressure regulator)
Ground Clearance:	12cm (Ground to bottom of Axle)
Dry Weight / Weight full of water	22.6 kg. /139.6kg
Spot Sprayer Delivery Hose Length:	4.5m
Broadcast Nozzle Specifications	
Total Spray Width	305cm
Effective Spray Width	203cm
Spray Overlap	102cm
Component Materials*	
Tank.....	Polyethylene, EPDM
Suction Tube.....	Polypropylene, PVC, Stainless Steel
Hose.....	PVC, EPDM (Max. Pressure 6.9Bar/100 psi)
Pump.....	Polypropylene, Viton®, Santoprene, Stainless Steel
Valves.....	Polypropylene, Polyacetal, Viton®, Nylon
Spot Spray Gun and Nozzle	Nylon, Polyacetal, Aluminum

*Before using any chemical, check to ensure the chemical is compatible with all materials in the system.

The noise emissions from this product do not exceed 70 dB(A).

Note: The sprayer is not compatible with bleach or chlorine products. Also, pumping any petroleum based fluid (gasoline, diesel, kerosene, oil) will severely damage the pump.

The manufacturer reserves the right to make improvements in design and/or changes in specifications at any time without incurring any obligation to install them on units previously sold.

Any Questions, Comments, Problems or Part Enquiries

Call Kincrome Customer Service on 1300 657 528

Exploded View & Parts List – K16004 117L Tow Behind Sprayer

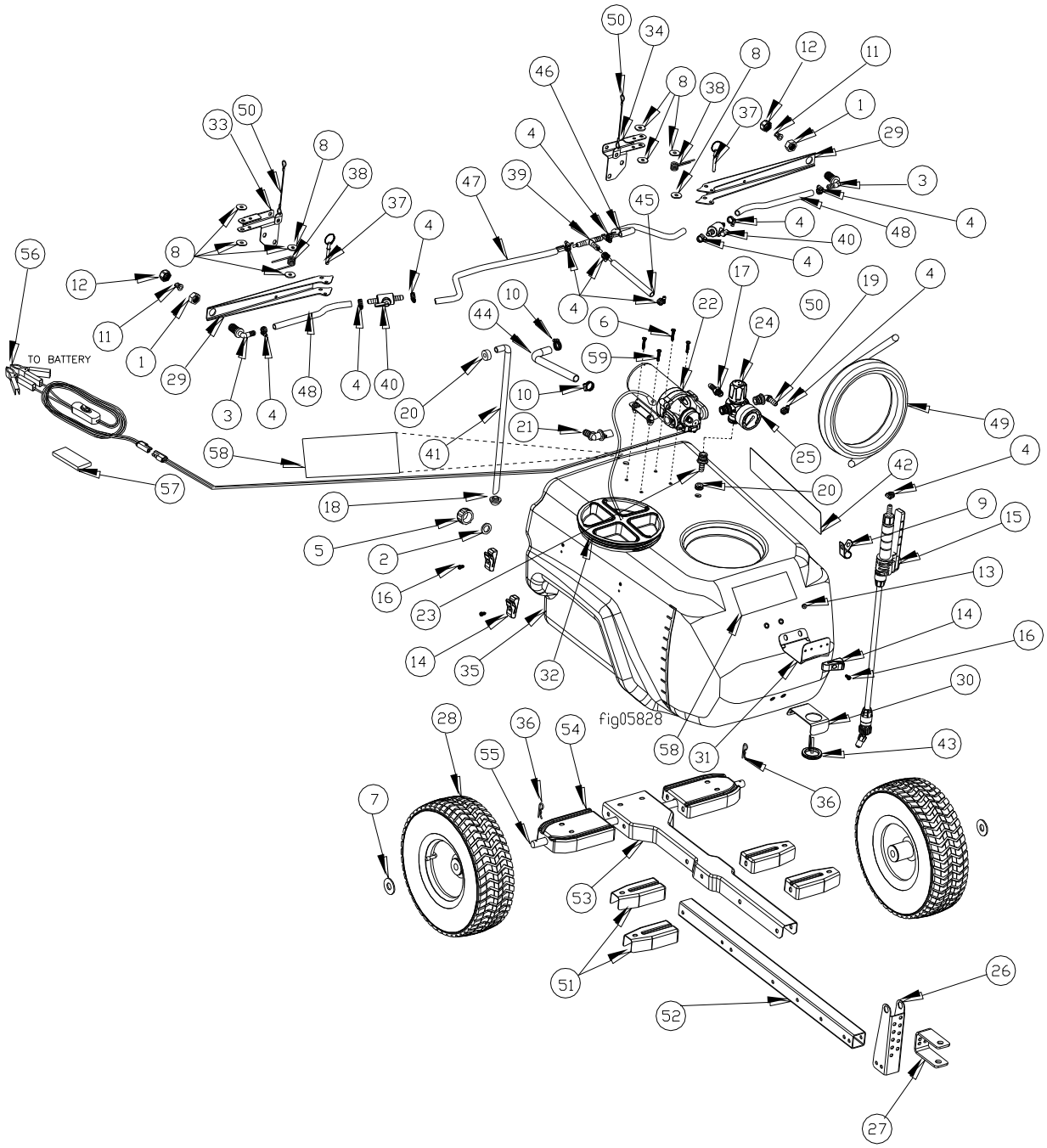

Exploded View & Parts List – K16004 117L Tow Behind Sprayer

Ref#	Part#	Supplier#	Description	Qty
1	K16003-1	5230	Nozzle Nut	2
2	K16003-2	5232	Rubber Washer	1
3	K16003-3	5383	Broadcast Nozzle Hose Barb	2
4	K16000-2	30746	3/8” Hose Clamp	12
5	K16003-5	37680	Drain Cap/Plug	1
6	K16001-3	82061	#10-24 x 1” Screw	3
7	K16003-7	82286	Axle Washer	4
8	K16004-8	82608	Nylon Washer (Pump Mounting)	8
9	K16001-13	777110	Hose Guide (P-Clip)	1
10	K16001-20	777119	1/2” Hose Clamp	2
11	K16003-9	792605	Broadcast Nozzle	2
12	K16003-10	777853	Nozzle Retaining Nut	2
13	K16003-11	82065	#10-24 Nyloc Nut	1
14	K16000-12	778560	Spray Gun Mounting/Storage Clip	3
15	K16000-1	779769	Spot Sprayer Gun Assembly	1
16	K16001-12	82059	#10-24 x 1/2” (Spray Gun Storage Clip Screw)	3
17	K16001-15	779854	1/4” MPT x 3/8” HB (Hose Fitting)	1
18	K16001-8	35203	Suction Strainer/Filter	1
19	K16004-19	787196	QC x 3/8” HB (Hose Fitting)	1
20	K16003-35	791998	Grommet (Tank)	2
21	K16004-21	787197	1/2” HB Elbow (Fitting for Pump)	1
22	K16004-22	797503	8.3 LPM Kincrome Pump	1
23	K16004-23	787193	QC x 1/2” HB Fitting (Bypass Fitting)	1
24	K16003-43	795848	Pressure Regulator	1
25	K16003-45	791465	Pressure Gauge	1
26	K16004-26	797516	Hitch Mounting Bracket	1
27	K16004-27	797531	Pivot Hitch	1
28	K16004-28	791988	Wheel/Tyre	2
29	K16004-29	797518	Broadcast Boom Arm	2
30	K16003-18	797481	Lower Hose Storage Hook	1
31	K16003-19	797479	Upper Hose Storage Hook	1
32	K16003-24	794111	Filler Cap	1
33	K16004-33	797520	Right Boom Bracket	1
34	K16004-34	797527	Left Boom Bracket	1
35	K16004-35	792821	117 Litre Tank W/ Decals	1
36	K16004-36	792778	Axle Pin/R-Clip	2
37	K16004-37	792417	Broadcast Boom Arm Pin	2
38	K16004-38	792421	Broadcast Arm Spring	2
39	K16004-39	792422	10mm (3/8”) Tee Pipe	1
40	K16003-29	792424	10mm (3/8”) Broadcast Nozzle Valve	2
41	K16004-41	792437	Suction Hose	1
42	K16003-36	797476	Kincrome Tank Decal	1
43	K16003-31	792453	Spray Gun Guide Grommet	1
44	K16004-44	792536	Draw Tube Hose	1
45	K16004-45	792539	10mm (3/8”) Outlet Hose	1
46	K16004-46	792540	10mm (3/8”) Left Boom Hose	1
47	K16004-47	792541	10mm (3/8”)Right Boom Hose	1
48	K16004-48	792542	10mm (3/8”) Boom Nozzle Hose	2
49	K16004-49	794455	10mm (3/8”) Spot Sprayer Hose	1
50	K16004-50	792611	Retaining Lanyard For K16004-37	2
51	K16004-51	797525	Front Tank Mounting Bracket – 282785	4

52	K16004-52	797515	Tow Arm	1
53	K16004-53	797524	Tow Chassis	1
54	K16004-54	797523	Rear Tank Mounting Bracket	2
55	K16004-55	791980	Axle	1
56	K16000-5	777493	Wire Harness w/ Remote Switch	1
57	K16003-39	35363	Hook and Loop Set	1
58	K16003-47	797482	Kincrome Branding Decal	2
59	K16004-59	82617	Pump Retaining Screw #10 – 24 x 1 1/8”	1
NA	K16004-60	797473	Kincrome Warning Label	1
NA	K16004-61	797535	Kincrome Pump Label	1

Any Questions, Comments, Problems or Part Enquiries

Call Kincrome Customer Service on 1300 657 528

Appendix A –Broadcast Spray Calibration Tables

Below are some guidelines to help you calibrate your tow behind broadcast sprayer. This is a very important step in operating the tow behind broadcast sprayer such that too much or too little chemical may be applied.

1. Using **Table 1,** find a table that corresponds with the chemical manufacturers suggested application rate (litres per hectare, litres per 100 sq. m., or litres per 10 sq. m.).
2. Find the application rate that is closest to the chemical manufacturer's recommendations.
11. The speed to drive your ATV is listed below the application rates.

TABLE 1

Spray Height	Pressure (kPa)	**Litres per Hectare** – based on water at 101cm spacing						
		1 KM/H	**3 KM/H**	**5 KM/H**	**7 KM/H**	**9 KM/H**	**12 KM/H**	**16 KM/H**
53 cm	69	147.1	49.0	29.3	21.0	16.3	12.2	9.2
53 cm	138	209.6	69.9	41.8	29.9	23.2	17.4	13.1
53 cm	207	253.7	84.6	50.6	36.2	28.1	21.1	15.8
53 cm	276	294.1	98.0	58.6	41.9	32.6	24.4	18.3

Spray Height	Pressure (kPa)	**Litres per 100 Sq.m. -** based on water at 101cm spacing						
		1 KM/H	**3 KM/H**	**5 KM/H**	**7 KM/H**	**9 KM/H**	**12 KM/H**	**16 KM/H**
53 cm	69	1.47	0.49	0.29	0.21	0.16	0.12	0.09
53 cm	138	2.10	0.70	0.42	0.30	0.23	0.17	0.13
53 cm	207	2.54	0.85	0.51	0.36	0.28	0.21	0.16
53 cm	276	2.94	0.98	0.59	0.42	0.33	0.24	0.18

Spray Height	Pressure (kPa)	**Litres per 10 Sq.m. –** based on water at 101cm spacing						
		1 KM/H	**3 KM/H**	**5 KM/H**	**7 KM/H**	**9 KM/H**	**12 KM/H**	**16 KM/H**
53 cm	69	0.15	0.05	0.03	0.02	0.02	0.01	0.01
53 cm	138	0.21	0.07	0.04	0.03	0.02	0.02	0.01
53 cm	207	0.25	0.08	0.05	0.04	0.03	0.02	0.02
53 cm	276	0.29	0.10	0.06	0.04	0.03	0.02	0.02

*** Approximate flow from one nozzle**

12. Use **Table 2** to choose the throttle setting on your ATV.

TABLE 2

Speed	**Time required in seconds to travel a distance of:**		
(KM/H)	**10 m.**	**50 m.**	**100 m.**
1	36	180	360
3	12	60	120
5	7	35	70
7	5	25	50
9	4	20	40
12	3	15	30
16	2	11	22

5. The coverage area can be found by dividing tank size by the application rate.
Example: 31 gallons divided by 100 litres/hectare = .49 hectare of coverage per tank.

Limited Warranty

Dear Valued Customer:

Use this product properly and enjoy the benefits from its high performance. By purchasing a Kincrome product, you show a desire for quality and durability. Like all mechanical equipment this unit requires a due amount of care. Treat this unit like the high quality piece of machinery it is. Neglect and improper handling may impair its performance. Please thoroughly read the instructions and understand the operation before using your product. Always contact Kincrome Customer Service on 1300 657 528 prior to having any service or warranty work performed, as some services performed by parties other than Kincrome approved service centers may void this warranty. This warranty is in lieu of any other warranty expressed or implied and Kincrome assumes no other responsibility or liability outside that expressed within this warranty.

Australian Limited Warranty

Warranty given by Kincrome Australia Pty Ltd of 3 Lakeview Drive, Caribbean Park, Scoresby, Victoria (Tel 1300 657 528). The applicable warranty period (24 months) commences on the date that the product is purchased. If this product has materials or workmanship defects (other than defects caused by abnormal or non warranted use) you can, at your cost, send the product to place of purchase, an authorised Kincrome service agent or one of Kincromes addresses for repair or replacement. Your rights under this warranty are in addition to any other rights you have under the Australian Consumer Law or other applicable laws. Our goods come with guarantees that cannot be excluded under the Australian Consumer Law. You are entitled to a replacement or refund for a major failure and compensation for any other reasonably foreseeable loss or damage. You are also entitled to have the goods repaired or replaced if the goods fail to be of acceptable quality and the failure does not amount to a major failure. For further details please visit www.kincrome.com.au or call us. Due to minor changes in design or manufacture, the product you purchase may sometimes differ from the one shown on the packaging. IMPORTANT! If the tool fails to operate correctly, call customer service on 1800 657 528 for advice on the best resolution for your situation. If a resolution cannot be achieved over the phone please take the tool and all related accessories to an authorised service centre or place of purchase showing proof of purchase for assistance.

Page intentionally left blank.



Kincrome Tools and Equipment
3 Lakeview Drive, Scoresby VIC 3179
Melbourne, Victoria
www.kincrome.com.au