KINCROME CONTOUR

Tool Chest 730mm (29") - 5 Drawer

Operation Manual

K72915/K72915B

IMPORTANT: THIS OPERATING MANUAL CONTAINS IMPORTANT SAFETY INFORMATION, READ CAREFULLY & UNDERSTAND ALL INFORMATION BEFORE OPERATING. SAVE THIS MANUAL FOR FUTURE USE



Do not open more than one drawer at a time. | Do not step on drawers. | Do not let children near the Toolbox. | Do not separate Chest from Trolley. | Do not exceed Drawer Load Limit | Not suitable for mounting in Vehicles | Set the brake on the locking castors unless your are moving the Toolbox. | Lock drawers and lid before moving the Toolbox.



Specifications

Drawer Load Capacity	40kg
Net Weight	40.5kg
Material	Heavy Gauge Steel
Measurements	L 730 x W 470 x H 486mm

Parts List

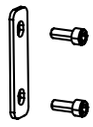

2 X MOUNTING PLATE & HEX BOLTS

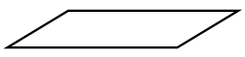

6 X EVA MATS

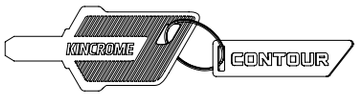

2 X KEY



Maintenance

> Periodically tighten all hardware
> Lubricate all slides twice a year
> Lubricate the lock with graphite annually
> Use a damp Microfibre cloth to clean all surfaces

Connect Chest to the Trolley (OPTIONAL)

TOOLS REQUIRED:



5MM HEX KEY

STEP 1:
Place the Chest on top of the Trolley.

STEP 2:

Attach the mounting plate to back of the product using the pre installed nut serts and 2 hex bolts provided. Tighten with hex key to secure.

STEP 3:

Repeat this process for other mounting plates.

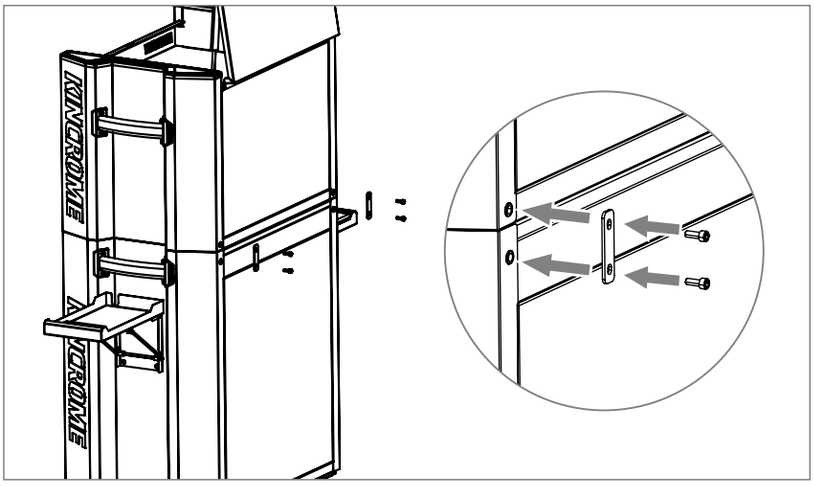

KINCROME CONTOUR

Tool Chest 730mm (29") - 5 Drawer

Operation Manual

K72915/K72915B

How to Remove & Reinsert Drawers

REMOVING THE DRAWERS

- Fully extend the empty drawer.
- Push up the right release lever while pushing down the left release lever.
- Pull the drawer outward until it is released from the drawer slide.

RE-INSERTING THE DRAWERS

- Extend the drawer slides.
- Insert the brackets on each side of the drawer into the slots on the slides, being careful that they are properly positioned.
- Once properly inserted, completely close the drawer to set the slides in their proper positions.

Note: If drawer does not slide in smoothly Do Not force. Remove and re install drawer.

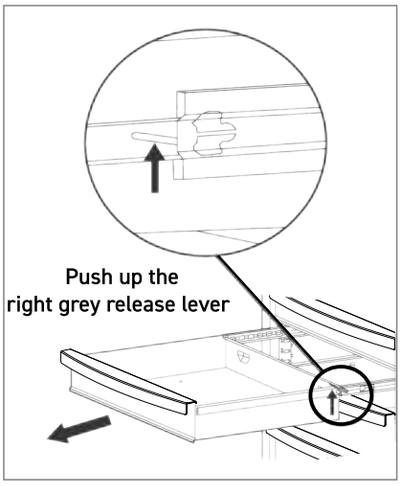

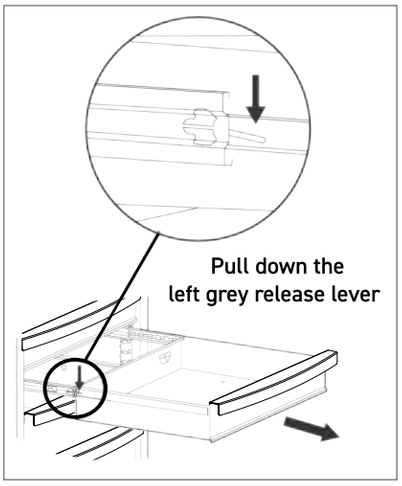

Spare Parts - Blue - K72915

Ref	Part Number	QTY	Description
1	K79950	5	CHEST ADRS BB SLIDE 45MM (PAIR)
2	K79951	1	LOCK & KEY CHEST/HUTCH BLUE
3	K79953	1	KEY ONLY CHEST/HUTCH/TROLLEY BLUE
4	K79968	1	CHEST 29" TOP EVA LINER 5MM X1
5	K79970	5	EVA STANDARD DRAWER LINER 5MM X1
6	K79975	2	MOUNTING BRACKET BLUE X1
7	K79979	2	HANDLE CHEST/TROLLEY/HUTCH BLUE X1

Spare Parts - Black - K72915B

Ref	Part Number	QTY	Description
1	K79950	5	CHEST ADRS BB SLIDE 45MM (PAIR)
2	K79952	1	LOCK & KEY CHEST/HUTCH BLACK
3	K79954	1	KEY ONLY CHEST/HUTCH/TROLLEY BLACK
4	K79968	1	CHEST 29" TOP EVA LINER 5MM X1
5	K79970	5	EVA STANDARD DRAWER LINER 5MM X1
6	K79976	2	MOUNTING BRACKET BLACK X1
7	K79980	2	HANDLE CHEST/TROLLEY/HUTCH BLACK X1

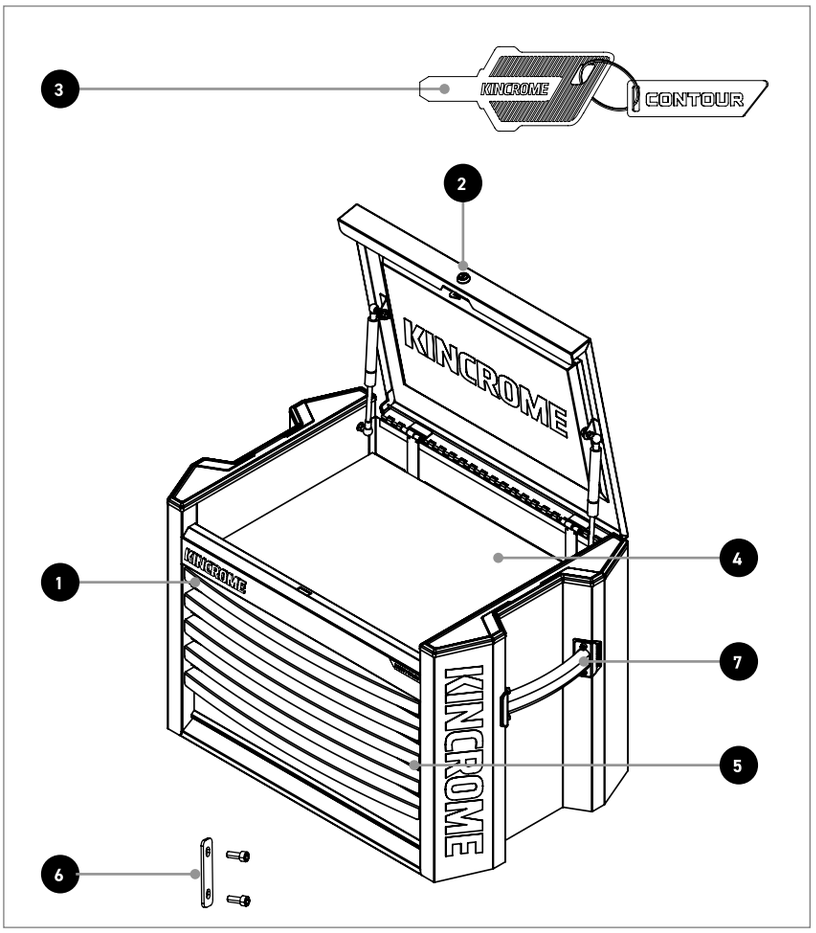

OFFICE CONTACT DETAILS

Phone: 1300 657 528 Email: enquiries@kincrome.com.au Website: www.kincrome.com.au

WARRANTY

3 YEAR WARRANTY

Our goods and services come with guarantees that cannot be excluded under the Australian Consumer Law. For major failures with the service, you are entitled: -to cancel your service contract with us; and -to a refund for the unused portion, or to compensation for its reduced value. You are also entitled to choose a refund or replacement for major failures with goods. If a failure with the goods or a service does not amount to a major failure, you are entitled to have the failure rectified in a reasonable time. If this is not done you are entitled to a refund for the goods and to cancel the contract for the service and obtain a refund of any unused portion. You are also entitled to be compensated for any other reasonably foreseeable loss or damage from a failure in the goods or service'. Kincrome Australia Pty Ltd of 3 Lakeview Drive, Caribbean Park, Scoresby, Victoria (Tel 1300 657 528) also provides the Kincrome Limited Lifetime Guarantee, 5 Year Warranty, 5 Year (3+2) warranty, 3 Year Warranty, 2 Year Warranty and 12-Month Warranty (Kincrome Express Warranties) in respect of some of its products. If a product is covered by a Kincrome Express Warranty and it has materials or workmanship defects (other than defects caused by abnormal or non warranted use) which are covered under the terms of the relevant Kincrome Express Warranty, you can, at your cost, send the product to the above address for repair or replacement. Your rights under a Kincrome Express Warranty are in addition to any other rights you have under the Australian Consumer Law or other applicable laws. For further details and terms please check our product guide, visit www.kincrome.com.au or call us. Every effort is made to ensure advertised stock is available, but due to factors beyond the control of Kincrome Australia Pty. Ltd, not all products advertised in this catalogue may be available at all stores. Kincrome Australia Pty. Ltd. reserves the right to correct printing errors. All sizes shown are approximate only. Accessories shown do not come with the product unless otherwise specified. Due to printing process, colours in this catalogue may vary slightly to actual item. E. & O. E.© Copyright 2022. Reproduction in whole or in part is prohibited without written approval.