KINCROME®
PROFESSIONAL QUALITY TOOLS

SPRAYER REGULATOR



K16125
ED4/SEPTEMBER 19

Hazard Signal Word Definitions

KINCROME
PROFESSIONAL QUALITY TOOLS

ITEM NUMBER: K16125

SERIAL NUMBER: _____

Owner's Manual

Instructions for Assembly and Operation for sprayer models:
K16003, K16004, K16005, K16006, K16007

Pressure Regulator + Agitation Kit:

Outdoor agricultural sprayer attachment used to maintain constant pressure while spraying, and to agitate the liquid** inside the tank and keep it well mixed.

⚠WARNING

READ and UNDERSTAND the Owner's Manual completely before using this item. Assemble, test, and use only in accordance with the Owner's Manual instructions.

READ and FOLLOW chemical safety instructions. Pesticides are hazardous chemicals.

KNOW emergency procedures BEFORE handling chemicals. Sprayer leaks, bodily chemical contact, poisoning, and spills require immediate response.

AVOID inhaling, ingesting, or coming into contact with any chemicals.

WEAR personal protective gear when operating, cleaning, and servicing the sprayer.

KEEP pump and spray materials away from children and pets. Pesticides are especially toxic to them.

DO NOT TURN ON POWER to sprayer until ready to spray in order to avoid unintentional spray release.

Improper use of the sprayer or handling of chemicals could result in serious injury or illness to the operator or nearby persons/animals, or could cause damage to the environment.

** This regulator is recommended for use in spraying non-flammable liquids such as pesticides, water for plants/trees or dust control, ice control chemicals, or water-based non-flammable sealants or stains for outdoor wood surfaces. However, WE RECOMMEND THAT THE REGULATOR NOT BE USED FOR OTHER PURPOSES ONCE IT HAS BEEN USED FOR SPRAYING PESTICIDES. Any chemical will leave some residual in the regulator, even after the regulator has been properly cleaned. These residual chemicals can have unexpected effects on future uses. For example, spraying water or other liquids that are contaminated with residual pesticide may result in unforeseen hazards to plant or animal life.

Any Questions, Comments or Parts Orders
Call Kincrome Tools + Equipment 1300 657 528

Hazard Signal Word Definitions

	This is the safety alert symbol. It is used to alert you to potential personal injury hazards. Obey all safety messages that follow this symbol to avoid possible injury or death.
⚠DANGER	DANGER (red) indicates an imminently hazardous situation which, if not avoided, will result in death or serious injury.
⚠WARNING	WARNING (orange) indicates a potentially hazardous situation which, if not avoided, could result in death or serious injury.
⚠CAUTION	CAUTION (yellow) indicates a potentially hazardous situation which, if not avoided, may result in minor or moderate injury.
CAUTION	CAUTION (yellow) used without the safety alert symbol indicates a potentially hazardous situation which, if not avoided, may result in property damage. fig01453

Table of Contents

Intended Use 4

Summary of Important Safety Information 5
- During Assembly
- During Operation
  - General Chemical Safety
  - Chemical Applicator Safety
  - Chemical Accident Procedures

Unpacking and Sprayer Identification 7

Installation
- K16005 10
- K16006, K16007 12
- Checking Installation 14

Operation
- **Preparing the Regulator for Each Use** 15
- **Using the Regulator**
  - Step One: Assess wind conditions and clear work area 16
  - Step Two: Operate the regulator 16
  - Step Three: Clean regulator and decontaminate after use 18

Storage 19
- Preparing for storage
- Removing from storage

Specifications 20

Accessories 21

Limited Warranty 22

Intended Use

The product is intended for use in spraying agricultural pesticides and other non-flammable liquids.

SPRAYING PESTICIDES:

Pesticides are hazardous chemicals that must be handled with caution as directed throughout this manual and on the pesticide label. Pesticides are regulated by the Environmental Protection Agency (EPA) and defined as:

Any substance or mixture of substances intended for preventing, destroying, repelling, or mitigating any pest. Though often misunderstood to refer only to insecticides, the term pesticide is a comprehensive term that applies to insecticides, herbicides, fungicides, and various other substances used to control pests.

The product is intended for use in spraying pesticides in liquid form only. The product is NOT intended for use in spraying pesticides in dry or aerosolized form, or for use with fumigants.

SPRAYING OTHER LIQUIDS:

In addition to spraying pesticides, this regulator may be used to spray other non-flammable liquids. Example uses include: watering plants/trees or spraying water for dust control, applying ice control chemicals, or applying water-based, non-flammable sealant or stain to outdoor wood surfaces.

However, **WE RECOMMEND THAT THE REGULATOR NOT BE USED FOR OTHER PURPOSES ONCE IT HAS ALREADY BEEN USED FOR SPRAYING PESTICIDES.** Any chemical will leave some residual in the regulator, even after the regulator has been properly cleaned. These residual chemicals can have unexpected effects on future uses. For example, spraying water or other liquids that are contaminated with residual pesticide may result in unforeseen hazards to plant or animal life.

Contact Kincrome Customer Service on 1300 657 528 for any questions about the appropriate use of the sprayer and/or optional accessories.

Summary of Important Information

⚠WARNING

Read and understand **this owner's manual** completely before using the regulator. Read each **chemical label's instructions** before handling the chemical.

Improper use of the regulator or handling of chemicals could result in serious injury or illness for the operator or nearby persons/animals, or cause damage to the environment.

LISTED BELOW is a summary of safety information of particular importance. See individual sections of this owner's manual for more details.

---------- DURING ASSEMBLY----------

CHECK and TEST completed assembly as directed in this manual. Serious injury could result from chemical leaks if sprayer is improperly assembled.

DO NOT MODIFY sprayer design.

----------DURING OPERATION----------

General Chemical Safety

READ and FOLLOW each chemical label's instructions and warnings.

AVOID inhaling, ingesting, or coming into contact with any chemicals.

KNOW applicable licensing and regulatory requirements for the chemical you plan to use.

KNOW emergency procedures before handling chemicals. Carefully review "Chemical Accident Procedures" listed below and later in this manual. Also see First Aid instructions on the chemical label.

WEAR protective clothing, eye protection, and chemical resistant gloves when filling, using, and cleaning the sprayer. Wear additional protective gear, such as facemask or apron, as recommended on the chemical label.

EXERCISE EXTRA CAUTION around children and pets. Pesticides are especially toxic to them. Keep sprayer and spray materials away from them at all times.

DO NOT MIX OR POUR chemicals in an enclosed, unventilated area

DO NOT USE flammable or corrosive chemicals in the sprayer.

FLUSH the sprayer before switching chemicals in order to prevent dangerous chemical interactions.

STORE pesticides in a correctly labeled container and in a secure location.

MONITOR the health of operators frequently exposed to pesticides, as recommended by the chemical label or local/federal regulations.

Chemical Application Safety

Before Spraying

INSPECT and PREPARE sprayer before each use as directed in this manual.

DO NOT TURN ON POWER to sprayer until ready to spray in order to avoid unintentional spray release.

DO NOT SPRAY when wind speed exceeds 5 KPH in order to minimize spray drift.

CLEAR work area of people/ pets and POST warning notices to restrict access for the period recommended on chemical label.

KEEP sprayer and spray materials away from children/pets. Pesticides can be especially toxic to children and animals.

DO NOT ALLOW anyone younger than 16 to operate the sprayer since pesticides are especially toxic to children.

During Spraying

DO NOT OVER-APPLY pesticide. Apply at rate recommended by chemical manufacturer. Excess pesticide can be dangerous to humans/animals, damage desirable plants, and contaminate soil and water sources.

DO NOT EAT, DRINK, SMOKE, RUB YOUR EYES, or TOUCH YOUR BARE SKIN while handling chemicals and spraying.

NEVER POINT A SPRAY GUN at people or animals.

EXERCISE EXTRA CAUTION when spraying near areas accessible to children and pets.

Summary of Important Information

CLEAN up spills immediately per instructions on the chemical label.
TURN OFF power to sprayer, and RELIEVE system pressure before leaving sprayer unattended.
SEE Troubleshooting section of this manual before attempting any repairs. Wear personal protective equipment and follow safety instructions.

After Spraying

CLEAN immediately after use according to the directions provided in this manual.
DECONTAMINATE yourself after you are done spraying and have cleaned the spraying system. Wash all exposed areas of the body with soap and water, and remove and launder clothing.
DISPOSE OF or STORE remaining chemicals in secure storage with correctly marked container.

Chemical accident procedures

Immediate response is necessary in the event of sprayer leaks, bodily chemical contact, poisoning, or spills. See instructions below:

Sprayer leak	**If the sprayer develops a leak, *immediately stop spraying***. Turn off power to the sprayer and follow directions below, as applicable.
Bodily chemical contact	**Personal contamination can occur when chemicals splash, spill, or spray directly onto a person.** 1. Immediately follow First Aid instructions on chemical label. General procedures can include: a) Eyes – immediately flush with water. b) Skin – wash all contaminated skin surfaces with soap and water. c) Clothing – remove contaminated clothing. Dispose of heavily contaminated clothing per chemical label instructions. 2. Seek medical advice if instructed on the label or the victim experiences symptoms of harmful effects. Bring the chemical label for reference.
Poisoning by ingestion or inhalation	**In case of poisoning from ingestion or inhalation:** **If the victim has collapsed or is not breathing, call 000.** Otherwise: 1. If you are the victim, immediately seek assistance from nearby personnel because you may become incapacitated. 2. Immediately follow first aid instructions on chemical label. 3. Call a poison control center for further advice. **In Australia. Call 13 11 26**. Have the chemical label available for reference.
Chemical spills	**Chemical spills must be quickly contained and properly cleaned up.** Refer to the chemical label for any specific clean-up instructions. General procedures include: 1. **Controlling** the spill by stopping the source of the spill. 2. **Containing** the spill so that it does not spread and get into water sources. 3. **Cleaning up** the spill immediately. 4. **Seeking additional advice** from: - *Chemical manufacturer*. See chemical label for contact information. - Contact the APVMA (Australian Pesticides & Veterinary Medicines Authority), by emailing enquiries@apvma.gov.au or calling (02) 6210 4701.

Unpacking and Sprayer Identification

Unpack and inspect parts

If you have missing or damaged components, please contact Kincrome Customer Service on 1300 657 528.

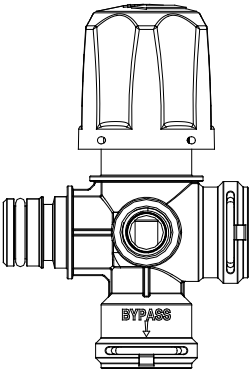

Regulator



Grommet



QC Clip



Screw (4)

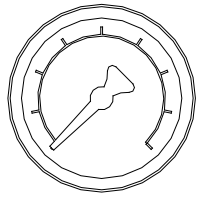

Pressure Gauge

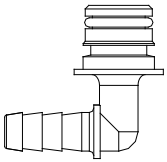

QC x 3/8 HB, Elbow

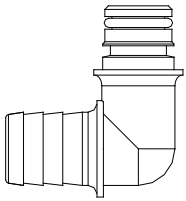

QC x 3/4 HB, Elbow

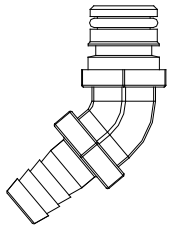

QC x 1/2 HB, Elbow 50°

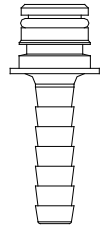

QC x 3/8 HB, Straight

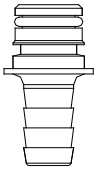

QC x 1/2 HB, Straight



Bushing, 1/2 MPT x 3/8 FPT

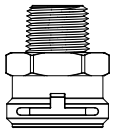

Adapter, Female QC x 3/8 MPT



Plug, 1/4 MPT

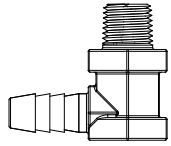

1/4 MPT x 3/8 HB, Elbow

Unpacking and Sprayer Identification

Drill Template Sheet

Use the four circle template when drilling the pump mounting holes on the sprayer tank. The position of the holes needed for each sprayer model is indicated by an X on the template.

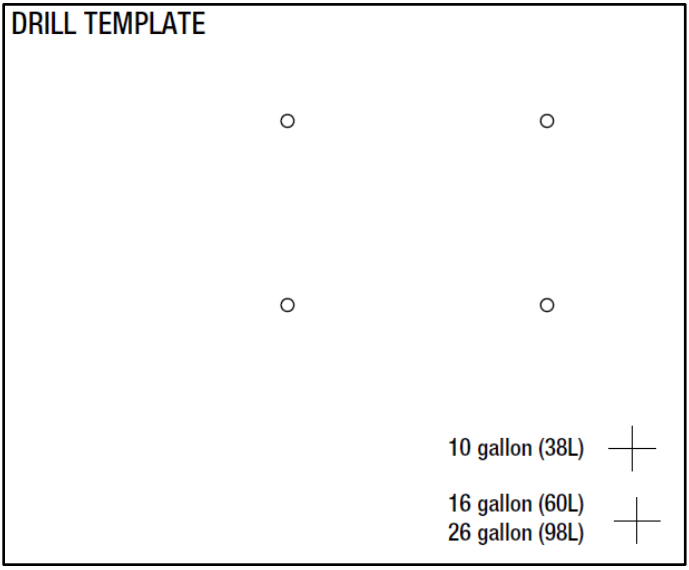

Unpacking and Sprayer Identification

Identify your sprayer

Your sprayer model number can be found on the serial number decal located on the pump. If you cannot locate the model number on your serial number decal, refer to the table below to determine the model number of your sprayer. Turn to the assembly section for your sprayer on the page number listed in the table.

Sprayer Model	Tank size	Pump model	Defining features
K16005	38 Litre	K16102	Spot spray gun only
K16006	60 Litre	K16103	Spot spray gun and single-nozzle broadcast lance
K16007	98 Litre	K16103	Spot spray gun and single-nozzle broadcast lance

NOTE: Kincrome does not recommend the use of metal fittings or rigid pipe to plumb the inlet/outlet ports. Standard plastic threaded fittings are available by calling Kincrome Customer Service at 1300 657 528.

In some cases, fittings may require a suitable thread sealer applied sparingly. **DO NOT** over-tighten; maximum torque is 45 in.-lb [5 N-m].

Tubing should be compatible with the spraying fluid. At least 18" [450mm] length is suggested to minimize stress on the fitting/ports and reduce noise. Allow for the shortest possible tubing route and avoid sharp bends that may kink over time.

Installation of a 50-mesh strainer is recommended to prevent foreign debris from entering the system. Failures due to foreign debris are not covered under the warranty.

NOTE: Restrictions on the inlet may cause a loss in performance. Inlet pressure must not exceed 30 psi [2.1 bar]

If a check valve is installed in the plumbing, it must have a cracking pressure of no more than 2 psi [0.14 bar].

⚠ CAUTION

Sealers and Teflon tape may act as lubricant causing cracked housings or stripped threads due to over tightening. Care should be used when applying sealers; it may enter the pump inhibiting valve action, causing no prime or no shut-off. Failures due to foreign debris are not covered under the warranty.

Installation—K16005

Step One: Disconnect pump from power supply

Step Two: Disconnect inlet and outlet fittings from pump

Remove steel clips from inlet and outlet ports of the pump.
Pull inlet and outlet fittings out of the pump. Do not disconnect hoses from fittings.

Step Three: Remove pump from sprayer

Remove four screws from pump mounting feet.
Remove pump from sprayer.

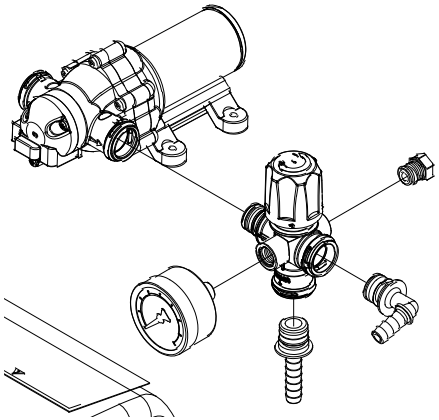

Step Four: Assemble fittings to regulator

Remove steel clips from outlet and bypass ports of regulator.
Install QC x 3/8" HB fitting into bypass port of regulator. To insert quick connect fittings, lubricate O-ring with water and twist fitting while inserting into pump port. Secure with steel clip.
Thread pressure gauge into 1/4" NPT port on front side of regulator (the side of the regulator with the "BYPASS" label).
Thread 1/4" NPT plug into 1/4" NPT port on back side of regulator.
Install QC x 3/8" HB, elbow into outlet port of regulator. To insert quick connect fittings, lubricate O-ring with water and twist fitting while inserting into pump port. Secure with steel clip.

Step Five: Assemble regulator and fittings to pump

Install inlet port of the regulator into outlet port of the pump. Secure with steel clip.
Turn regulator to orient knob toward the top of the pump.

Step Six: Drill hole in tank

Align the four circles on the supplied drill template sheet with the pump mounting holes on the sprayer tank.
Using a 9/16" drill bit (not included) drill a hole through the top of the tank in the position indicated by the appropriate X on the template.
Remove plastic debris from inside the tank (if chemicals have been used inside the tank, refer to pg. 18 step 4 for personal decontamination after removing debris).

Installation—K16005

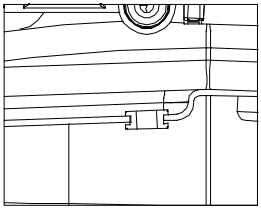

Step Seven: Install rubber grommet into hole in tank

Apply soap to rubber grommet.

Press grommet into the 9/16" hole in the sprayer tank. Ensure the bottom lip of the grommet is fully through the hole, and the top lip is flush with the top of the tank.

Step Eight: Reinstall pump onto sprayer

Apply soap to bypass fitting on regulator.

Press bypass fitting into the grommet.

Reinstall four screws through pump feet and into threaded holes in the tank.

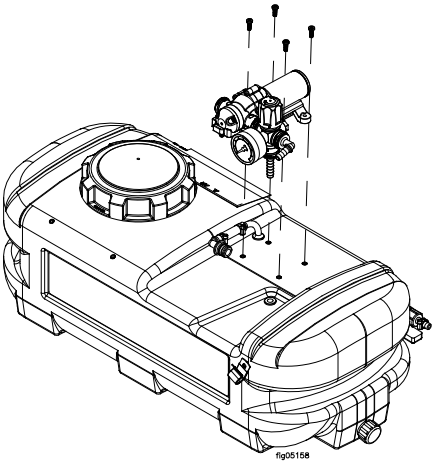

Step Nine: Reinstall hoses

Install fitting on inlet hose into inlet port of the pump. To insert quick connect fittings, lubricate O-ring with water and twist fitting while inserting into pump port. Secure with steel clip.

Install fitting on outlet hose into outlet port of the regulator. To insert quick connect fittings, lubricate O-ring with water and twist fitting while inserting into pump port. Secure with steel clip.

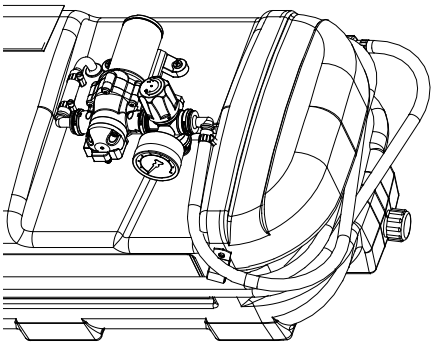

Continue to page 14.

Installation—K16006, K16007

Step One: Disconnect pump from power supply

Step Two: Disconnect inlet and outlet fittings from pump

Slide red QC clips open on the inlet and outlet ports of the pump.
Pull inlet and outlet fittings out of the pump.
Loosen hose clamp on outlet hose and broadcast hose and remove 1/4" NPT x 3/8" straight HB fitting from outlet fitting.
Do not disconnect inlet hose from inlet fitting.

Step Three: Remove pump from sprayer

Remove four screws from pump mounting feet.
Remove pump from sprayer.

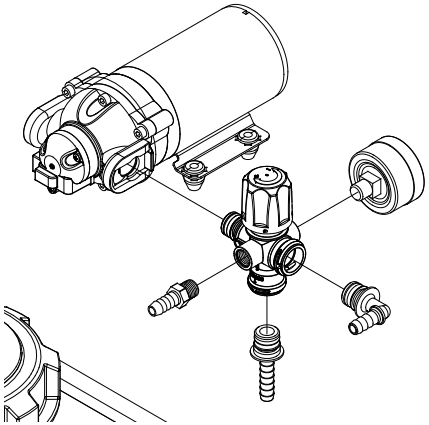

Step Four: Assemble fittings to regulator

Remove steel clips from outlet and bypass ports of regulator. Install QC x 3/8" HB fitting into bypass port of regulator. To insert quick connect fittings, lubricate O-ring with water and twist fitting while inserting into pump port. Secure with steel clip. Thread 1/4" NPT x 3/8" straight HB fitting (removed from outlet fitting in Step Two) into 1/4" NPT port on front side of regulator (the side of the regulator with the "BYPASS" label). Thread pressure gauge into 1/4" NPT port on back side of regulator. Install QC x 3/8" HB elbow fitting into outlet port of regulator. To insert quick connect fittings, lubricate O-ring with water and twist fitting while inserting into pump port. Secure with steel clip.

Step Five: Assemble regulator and fittings to pump

Install inlet port of the regulator into outlet port of the pump. Slide red QC clip closed.
Turn regulator to orient knob toward the top of the pump.

Step Six: Drill hole in tank

Align the four circles on the supplied drill template sheet with the pump mounting holes on the sprayer tank.
Using a 9/16" drill bit (not included) drill a hole through the top of the tank in the position indicated by the appropriate X on the template.
Remove plastic debris from inside the tank (if chemicals have been used inside the tank, refer to pg. 18 step 4 for personal decontamination after removing debris).

Installation—K16006, K16007

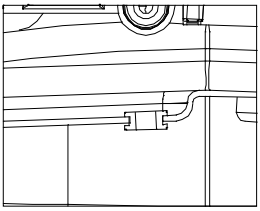

Step Seven: Install rubber grommet into hole in tank

Apply soap to rubber grommet.

Press grommet into the 9/16" hole in the sprayer tank. Ensure the bottom lip of the grommet is fully through the hole, and the top lip is flush with the top of the tank.

Step Eight: Reinstall pump onto sprayer

Apply soap to bypass fitting on regulator.

Press bypass fitting into the grommet.

Reinstall four screws through pump feet and into threaded holes in the tank.

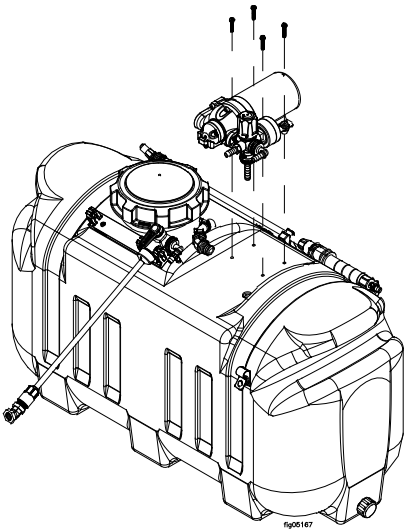

Step Nine: Reinstall hoses

Install fitting on inlet hose into inlet port of the pump. To insert quick connect fittings, lubricate O-ring with water and twist fitting while inserting into pump port. Slide red QC clip closed.

Install gun hose onto 3/8" HB elbow fitting in the outlet port of the regulator. Secure with hose clamp.

Install broadcast hose onto 3/8" straight HB fitting in the 1/4" NPT port of the regulator. Secure with hose clamp.

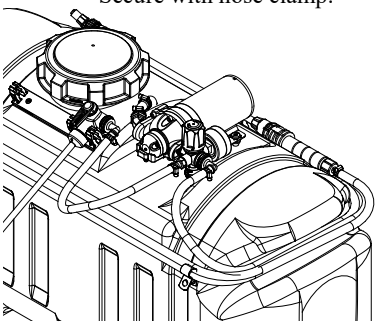

Continue to page 14.

Checking Installation

Step One: Connect pump to battery or 12V supply

Following the instructions in your pump or sprayer manual, reconnect the pump to a 12V power supply.

⚠ WARNING

Batteries are hazardous because they contain caustic acid, can emit explosive gases, and can cause electric shock.

Caution must be exercised when making connections to a battery to avoid shock and contact with the acid, and to prevent any sparking that could lead to an explosion.

ALWAYS follow the safety instructions and steps listed in your pump or sprayer manual i*n exact sequence* when connecting the pump to the battery terminals.

Step Two: Check and test completed assembly

⚠ WARNING

Check and test completed assembly

Serious injury could result from chemical leaks if regulator is improperly assembled or the design of the sprayer is modified.
Follow the steps below to ensure the regulator is properly assembled. Never modify the sprayer design.

1. Check assembly	**Check assembly to assure the regulator is properly assembled and in safe working condition:**
2. Test with water	**Test the system for leaks with water:** a) Fill the tank with water. b) The pump is an "on demand" pump. When turned on, the pump will prime itself, then turn off once reaching pressure. When the flow continues, the pump will automatically re-start. c) Check for leaks throughout the system. If a leak is detected, fix the leak and re-test the system with water.

Operation – Using the Regulator

If the regulator has been used previously, it must be prepared BEFORE EACH SUBSEQUENT USE.

⚠ WARNING

Read instructions below carefully for inspecting and preparing the regulator.

Damaged or clogged equipment could result in leaks or uncontrolled spray.

Leaks could result in injury to the operator or bystanders from chemical exposure, or cause damage to the environment.

Important safety rules:

Power off. Make sure all power is OFF before cleaning, inspecting, or servicing the regulator.

Guards / shields. Make sure all guards and shields are replaced after servicing the regulator.

Replacement parts. If a part needs replacement, only use parts that meet the manufacturer's specifications. Replacement parts that do not meet specifications may result in a safety hazard or poor operation.

1. Ensure clean system	**Ensure the regulator has been thoroughly flushed and drained of all residual chemicals from prior uses.**
2. Inspect & repair	**Inspect and test the sprayer thoroughly**: a) Inspect hoses/ lines for exposed mesh and holes. Replace all worn or damaged hoses/ lines. b) Inspect fittings for cracks and leaks. Replace all damaged fittings with original Kincrome parts. c) Partially fill system with plain water and spray to test for leaks. Repair as needed. ***IMPORTANT: After any repair work has been done, ALWAYS test for leaks with water one final time before using.***

Operation – Using the Regulator

Step One: Assess wind conditions and clear work area

Before you decide to spray, you must determine whether wind conditions are suitable. You must also restrict access to the work area to ensure the safety of bystanders.

⚠ WARNING

Do not spray if wind speeds are greater than 5 KPH or if there are bystanders in the intended spray area.

1. Assess wind speed	**Assess weather conditions to ensure that it is not too windy to spray.** **DO NOT SPRAY if wind speeds are greater than 5 KPH.** *Visible indication of wind speed*: If leaves are in constant motion or there is any branch movement, DO NOT spray because the wind is too strong.
2. Clear work area	**Clear the work area of all bystanders and pets.** Restrict access by the public for the period recommended on chemical label.

Step Two: Operate the regulator

⚠ WARNING

ALWAYS wear personal protective equipment as directed on the chemical label when spraying.

Long pants and sleeves, chemical-resistant gloves, and eye protection are strongly recommended. Additional protective gear may be required depending on the particular pesticide.

1. Review safety information	**Review the "Summary of Important Information"** related to Chemical Application Safety provided in this manual.
2. Wear personal protective equipment	**Wear personal protective equipment as directed on the chemical label.**
3. Tighten knob	**Turn regulator knob clockwise until it stops.** 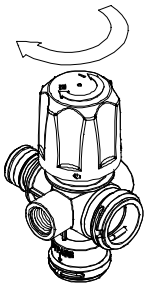 *Note: With the knob completely tightened, the regulator will not allow any fluid through the bypass port and back to tank. In this configuration, the pump will function in its normal "demand" mode.*

Operation – Using the Regulator

4. Turn pump on	The pump will build pressure until the shut off pressure is reached. Once the shut off pressure is reached, the pump motor will turn off.
5. Begin spraying	**Actuate the spray gun trigger or open the valve(s) to the boom nozzles.** Adjust spray gun nozzle to desired spray pattern and/or make sure the boom nozzles are free of debris.
6. Adjust pressure	**Turn regulator knob counter-clockwise to reduce and set the desired spraying pressure.** 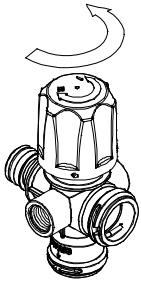 *Note: When setting the pressure, always reduce the pressure until the desired setting is reached.* *Note: If the pressure is still too low when the regulator knob is completely tightened, smaller or fewer nozzles need to be used.*
7. Discontinue use if clogged or inoperative	**If the regulator becomes clogged or inoperative during use, *discontinue use immediately*.** - DO NOT attempt to service while chemicals are in the system and power is connected.

Note: *A reserve, clean container capable of holding at least the volume of the entire pump system should be kept for use when the system needs to be emptied temporarily for repairs. It is advisable to purchase a reserve tank suitable for pesticide storage use in these circumstances. The container should be properly labeled as to its contents if it is used.*

Operation – Using the Regulator

Step Three: Clean regulator and decontaminate after use

When done using the regulator, it is important to clean the regulator and decontaminate yourself. Do not store the regulator when saturated with chemicals, as it is unsafe and could also result in damage to the equipment.

⚠ WARNING

Cleanup and decontamination procedures must be followed after each use.

Improper equipment cleanup and disposal of chemicals can result in dangerous chemical exposure to humans and the environment, as well as equipment damage.

Personal decontamination is required after spraying to minimize unsafe exposure to chemicals and potential illness.

1. Drain pump system	**If there is excess pesticide left in the system, drain the system:** a) Disconnect power to the pump and relieve system pressure. b) Find a suitable container in which to drain the unused pesticide. c) While wearing rubber gloves, eye protection, and all other required personal protective equipment, allow pesticide to drain into container.
2. Unused chemical	**Properly store or dispose of unused chemical:** a) If the unused pesticide is to be stored for future use: Store all unused pesticide in its original, or a suitably marked, container in a secure location out of the reach of children & animals. b) If remaining pesticide is to be disposed: **Properly dispose of the remaining chemical and its container per the chemical manufacturer's recommendation and according to local hazardous waste disposal regulations.**
3. Flush regulator	**Flush the regulator per the chemical manufacturer's recommendations.** A general procedure is as follows: a) Add fresh water to the pump system. b) Reconnect power to the pump. c) Operate the pump system and discharge all rinse water onto an area that can accept dilute pesticide application. d) Add 20 litres of the chemical manufacturer's recommended cleaning solution. Operate the pump system, collecting the discharged solution if recommended by the manufacturer. e) After flushing, disconnect power to the pump and be sure all system pressure is relieved. f) Dispose of cleaning solution discharge as recommended by the manufacturer of the solution.
4. Decontaminate & launder	**Decontaminate yourself after you are finished handling chemicals:** a) Remove all clothing worn during spraying and chemical handling. b) Wash all exposed parts of the body with soap and water. c) Launder clothing separately from other wash.

Storage

Prepare the regulator for end-of-season storage by running antifreeze through the system. This will keep internal parts lubricated, protect against corrosion, and keep the unit from freezing.

CAUTION
The regulator may be damaged if it freezes. Protect the regulator from freezing during storage by following the instructions below.

Preparing for storage:

1. Add antifreeze	Pour antifreeze into the pump system. *Some antifreeze contain Ethanol (which is alcohol based and highly flammable.) which should not be used.*
2. Spray briefly	Turn on the pump and run the pump system briefly until fluid sprays.

Removing from storage:

1. Drain	Drain the antifreeze left in the pump system into a suitable container.
2. Flush with water	Fill the pump system with fresh water and run through the system. Operate the pump system until the system is completely flushed. Be sure to set up containers to capture the antifreeze flush water.
3. Disposal	Dispose of the antifreeze and flush water properly.

Specifications

Ports

Inlet	Quick connect, ¾" male
Outlet	Quick connect, ¾" female
Bypass	Quick connect, ¾" female
Gauge (2)	NPT, ¼" female

Maximum pressure	100 psi (7 bar)
Maximum flow	7.0 GPM (27 LPM)
Maximum fluid temperature	120°F (50°C)

Component materials*

Polypropylene, Viton , Nylon, Polyacetal

*Before using any chemical, check to ensure the chemical is compatible with all materials in the system.

Note: The regulator is not compatible with bleach or chlorine products. Also, pumping any petroleum based fluid (gasoline, diesel, kerosene, oil) will severely damage the regulator.

The manufacturer reserves the right to make improvements in design and/or changes in specifications at any time without incurring any obligation to install them on units previously sold.

Any Questions, Comments or Parts Orders
Call Kincrome Tools + Equipment 1300 657 528

Accessories

Additional Quick Connect fittings are listed below. Call your local Kincrome stockist to order. All Quick Connect fittings are compatible with outlet and bypass ports of regulator.

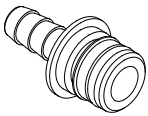

Quick Connect x 3/8" Hose barb
Part # K16140

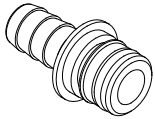

Quick Connect x 1/2" Hose barb
Part # K16141

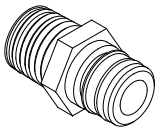

Quick Connect x 1/2" MNPT
Part # K16142

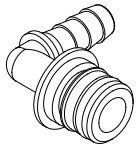

Quick Connect x 3/8" Hose barb elbow
Part # K16143

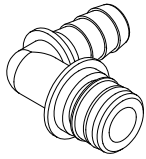

Quick Connect x 1/2" Hose barb elbow
Part # K16144

Part#	Description
K16140	Quick Connect x 3/8" Hose barb
K16141	Quick Connect x 1/2" Hose barb
K16142	Quick Connect x 1/2" MNPT
K16143	Quick Connect x 3/8" Hose barb elbow
K16144	Quick Connect x 1/2" Hose barb elbow

Limited Warranty

Dear Valued Customer:

Use this product properly and enjoy the benefits from its high performance. By purchasing a Kincrome product, you show a desire for quality and durability. Like all mechanical equipment this unit requires a due amount of care. Treat this unit like the high quality piece of machinery it is. Neglect and improper handling may impair its performance. Please thoroughly read the instructions and understand the operation before using your product. Always contact Kincrome Customer Service on 1300 657 528 prior to having any service or warranty work performed, as some services performed by parties other than Kincrome approved service centers may void this warranty. This warranty is in lieu of any other warranty expressed or implied and Kincrome assumes no other responsibility or liability outside that expressed within this warranty.

Australian Limited Warranty

Warranty given by Kincrome Australia Pty Ltd of 3 Lakeview Drive, Caribbean Park, Scoresby, Victoria (Tel 1300 657 528). The applicable warranty period (24 months) commences on the date that the product is purchased. If this product has materials or workmanship defects (other than defects caused by abnormal or non warranted use) you can, at your cost, send the product to place of purchase, an authorised Kincrome service agent or one of Kincromes addresses for repair or replacement. Your rights under this warranty are in addition to any other rights you have under the Australian Consumer Law or other applicable laws. Our goods come with guarantees that cannot be excluded under the Australian Consumer Law. You are entitled to a replacement or refund for a major failure and compensation for any other reasonably foreseeable loss or damage. You are also entitled to have the goods repaired or replaced if the goods fail to be of acceptable quality and the failure does not amount to a major failure. For further details please visit www.kincrome.com.au or call us. Due to minor changes in design or manufacture, the product you purchase may sometimes differ from the one shown on the packaging. IMPORTANT! If the tool fails to operate correctly, call customer service on 1800 657 528 for advice on the best resolution for your situation. If a resolution cannot be achieved over the phone please take the tool and all related accessories to an authorised service centre or place of purchase showing proof of purchase for assistance.

Page intentionally left blank.

KINCROME
PROFESSIONAL QUALITY TOOLS

www.kincrome.com.au