KINCROME®

PROFESSIONAL QUALITY TOOLS

SPRAYER BOOM KIT

7 NOZZLES

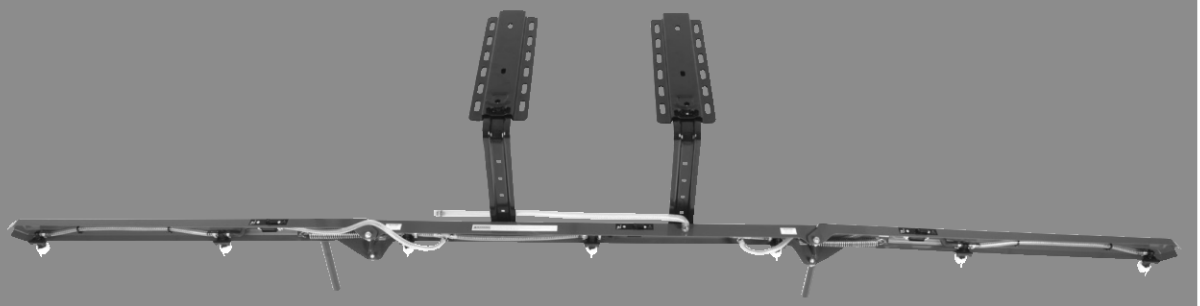

K16127
ED4/SEPTEMBER 19

Hazard Signal Word Definitions

KINCROME
PROFESSIONAL QUALITY TOOLS

ITEM NUMBER: K16127

SERIAL NUMBER: _____

Owner's Manual

Instructions for Assembly, Testing, Operation, Servicing, and Storage

ATV Boom Kit, 7-Nozzle: For outdoor use with agricultural pesticides and other liquids**

⚠ WARNING

READ and UNDERSTAND the Owner's Manual completely before using this sprayer. Assemble, test, and use only in accordance with the Owner's Manual instructions.

READ and FOLLOW chemical label instructions. Pesticides are hazardous chemicals.

KNOW emergency procedures BEFORE handling chemicals. Sprayer leaks, bodily chemical contact, poisoning, and spills require immediate response.

AVOID inhaling, ingesting, or coming into contact with any chemicals.

WEAR personal protective gear when filling, using, cleaning, and servicing the sprayer.

KEEP sprayer and spray materials away from children and pets. Pesticides are especially toxic to them.

EXERCISE CAUTION in ATV vehicle handling and do not exceed 5 KPH. ATV will be less stable and handle very differently with filled sprayer attached.

DO NOT TURN ON POWER to sprayer until ready to spray in order to avoid unintentional spray release.

ALWAYS keep a fire extinguisher rated "ABC" nearby.

Improper use of the sprayer or handling of chemicals could result in serious injury or illness to the operator or nearby persons/animals, or could cause damage to the environment.

**This boom is recommended for use in spraying non-flammable liquids such as pesticides and water for dust control. The boom will be damaged and warranty voided if used to apply bleach, chlorine, ice control chemicals, or any petroleum based product (gasoline, diesel, kerosene, oil). The boom should not be used to transfer any product intended for human consumption. WE RECOMMEND THAT THE BOOM NOT BE USED FOR OTHER PURPOSES ONCE IT HAS BEEN USED FOR SPRAYING PESTICIDES. Any chemical will leave some residual in the boom components, even after the boom has been properly cleaned. These residual chemicals can have unexpected effects on future uses. For example, spraying water or other liquids that are contaminated with residual pesticide may result in unforeseen hazards to plant or animal life. This boom should not be used by people with reduced physical, sensory or mental capabilities or lack of experience and knowledge.

Any Questions, Comments or Parts Orders
Call Kincrome Tools + Equipment 1300 657 528

Hazard Signal Word Definitions

	This is the safety alert symbol. It is used to alert you to potential personal injury hazards. Obey all safety messages that follow this symbol to avoid possible injury or death.
⚠DANGER	DANGER (red) indicates an imminently hazardous situation which, if not avoided, will result in death or serious injury.
⚠WARNING	WARNING (orange) indicates a potentially hazardous situation which, if not avoided, could result in death or serious injury.
⚠CAUTION	CAUTION (yellow) indicates a potentially hazardous situation which, if not avoided, may result in minor or moderate injury.
CAUTION	CAUTION (yellow) used without the safety alert symbol indicates a potentially hazardous situation which, if not avoided, may result in property damage. fig01453

Table of Contents

Summary of Important Safety Information 4
During Assembly
During Operation
General Chemical Safety
Chemical Application Safety
ATV Vehicle Handling Safety
Chemical Accident Procedures
Warning Label Locations 7
Component Inventory
Unpacking 8
Unpacking the Manual Bag 9
Assembly
Step One: Install tank mounts to bottom of tank 10
Step Two: Install boom mounts to tank mounts 11
Step Three: Install boom assembly to boom mounts 12
Step Four: For sprayer item # K16006, K16007 13
Step Five: Attach boom supply hose to sprayer 14
Step Six: Check and test completed assembly. 15
Operation
Important Safety Information - Operation 16
General Chemical Safety
Chemical Application Safety
ATV Vehicle Handling Safety
Chemical Accident Procedures
Using the boom kit
Step One: Assess wind conditions and clear work area 20
Step Two: Operate the boom kit 21
Step Four: Clean sprayer and decontaminate after use 24
Storage 25
Preparing for storage
Removing from storage

Parts Breakdown – Exploded View 26
Appendix A: Boom Spray Calibration Tables 28
Limited Warranty 29

Summary of Important Safety Information

⚠ WARNING

Read and understand **this owner's manual** completely before using the sprayer.
Read each **chemical label's instructions** before handling the chemical.

Improper use of the sprayer boom kit or handling of chemicals could result in serious injury or illness for the operator or nearby persons/animals, or cause damage to the environment.

LISTED BELOW is a summary of safety information of particular importance. See individual sections of this owner's manual for more details.

---------- DURING ASSEMBLY ----------

EXERCISE CAUTION when attaching remote switch to battery terminals. Follow the steps listed in the Assembly section of this manual i*n exact sequence* when connecting the sprayer's remote switch battery clamps to the battery terminals. *Caution must be exercised to avoid contact with battery acid and to prevent sparking.*
CHECK and TEST completed assembly as directed in this manual. Serious injury could result from chemical leaks if sprayer is improperly assembled.
DO NOT MODIFY sprayer design.

---------- DURING OPERATION ----------

General Chemical Safety

READ and FOLLOW each chemical label's instructions and warnings.
AVOID inhaling, ingesting, or coming into contact with any chemicals.
KNOW applicable licensing and regulatory requirements for the chemical you plan to use.
KNOW emergency procedures before handling chemicals. Carefully review "Chemical Accident Procedures" listed below and later in this manual. Also see First Aid instructions on the chemical label.
WEAR protective clothing, eye protection, and chemical resistant gloves when filling, using and cleaning the sprayer. Wear additional protective gear, such as facemask or apron, as recommended on the chemical label.
EXERCISE EXTRA CAUTION around children and pets. Pesticides are especially toxic to them. Keep sprayer and spray materials away from them at all times.
DO NOT MIX OR POUR chemicals in an enclosed, unventilated area
DO NOT USE flammable or corrosive chemicals in the sprayer.
FLUSH the sprayer before switching chemicals in order to prevent dangerous chemical interactions.
STORE pesticides in a correctly labeled container and in a secure location.
MONITOR the health of operators frequently exposed to pesticides, as recommended by the chemical label or local/federal regulations.

Chemical Application Safety

Before Spraying

INSPECT and PREPARE sprayer before each use as directed in this manual.
DO NOT TURN ON POWER to sprayer until ready to spray in order to avoid unintentional spray release.
MAKE SURE BOOM NOZZLES ARE ORIENTED to spray straight down before starting the sprayer. An incorrectly positioned boom nozzle may spray chemicals on you or others.
DO NOT SPRAY when wind speed exceeds 4 MPH in order to minimize spray drift.
CLEAR work area of people/ pets and POST warning notices to restrict access for the period recommended on chemical label.
KEEP sprayer and spray materials away from children/pets. Pesticides can be especially toxic to children and animals.
DO NOT ALLOW anyone younger than 16 to operate sprayer since pesticides are especially toxic to children.

During Spraying

DO NOT OVERAPPLY pesticide. Apply at rate recommended by chemical manufacturer. Excess pesticide can be dangerous to humans/animals, damage desirable plants, and contaminate soil and water sources.
DO NOT EAT, DRINK, SMOKE, RUB YOUR EYES, or TOUCH YOUR BARE SKIN while handling chemicals and spraying.

Summary of Important Safety Information (continued)

During Spraying

DO NOT OVERAPPLY pesticide. Apply at rate recommended by chemical manufacturer. Excess pesticide can be dangerous to humans/animals, damage desirable plants, and contaminate soil and water sources.

DO NOT EAT, DRINK, SMOKE, RUB YOUR EYES, or TOUCH YOUR BARE SKIN while handling chemicals and spraying.

NEVER POINT THE SPRAY GUN at people or animals.

EXERCISE EXTRA CAUTION when spraying near areas accessible to children and pets.

CLEAN up spills immediately per instructions on the chemical label.

TURN OFF vehicle and set brake or chock wheels, TURN OFF power to sprayer, and RELIEVE system pressure before leaving sprayer unattended.

SEE Troubleshooting section in the sprayer manual before attempting any repairs. Wear personal protective equipment and follow safety instructions.

After Spraying

CLEAN sprayer immediately after use according to the directions provided in this manual.

DECONTAMINATE yourself after you are done spraying and have cleaned the sprayer. Wash all exposed areas of the body with soap and water, and remove and launder clothing.

DISPOSE OF or STORE remaining chemicals in secure storage with correctly marked container.

ATV Vehicle Handling Safety

DO NOT ALLOW drivers younger than 16 to operate ATV with sprayer attached.

EXERCISE SPECIAL CAUTION in ATV vehicle handling and DO NOT exceed 5 KPH. ATV will be less stable and perform very differently with filled sprayer attached. Exercise particular caution on sloped or rough surfaces to avoid rollover. Use a vehicle equipped with rollover protection for use on non-level terrain.

DO NOT RIDE or TRANSPORT cargo on the sprayer.

Summary of Important Safety Information (continued)

Chemical accident procedures

Immediate response is necessary in the event of sprayer leaks, bodily chemical contact, poisoning, or spills. See instructions below:

Sprayer leak	**If the sprayer develops a leak, *immediately stop spraying***. Turn off power to the sprayer and follow directions below, as applicable.
Bodily chemical contact	**Personal contamination can occur when chemicals splash, spill, or spray directly onto a person.** 1. Immediately follow First Aid instructions on chemical label. General procedures can include: a) Eyes – immediately flush with water. b) Skin – wash all contaminated skin surfaces with soap and water. c) Clothing – remove contaminated clothing. Dispose of heavily contaminated clothing per chemical label instructions. 2. Seek medical advice if instructed on the label or the victim experiences symptoms of harmful effects. Bring the chemical label for reference.
Poisoning by ingestion or inhalation	**In case of poisoning from ingestion or inhalation:** **If the victim has collapsed or is not breathing, call 000.** Otherwise: 1. If you are the victim, immediately seek assistance from nearby personnel because you may become incapacitated. 2. Immediately follow first aid instructions on chemical label. 3. Call a poison control center for further advice. **In Australia. Call 13 11 26**. Have the chemical label available for reference.
Chemical spills	**Chemical spills must be quickly contained and properly cleaned up.** Refer to the chemical label for any specific clean-up instructions. General procedures include: 1. **Controlling** the spill by stopping the source of the spill. 2. **Containing** the spill so that it does not spread and get into water sources. 3. **Cleaning up** the spill immediately. 4. **Seeking additional advice** from: - *Chemical manufacturer*. See chemical label for contact information. - Contact the APVMA (Australian Pesticides & Veterinary Medicines Authority), by emailing enquiries@apvma.gov.au or calling (02) 6210 4701.

Warning Label Location

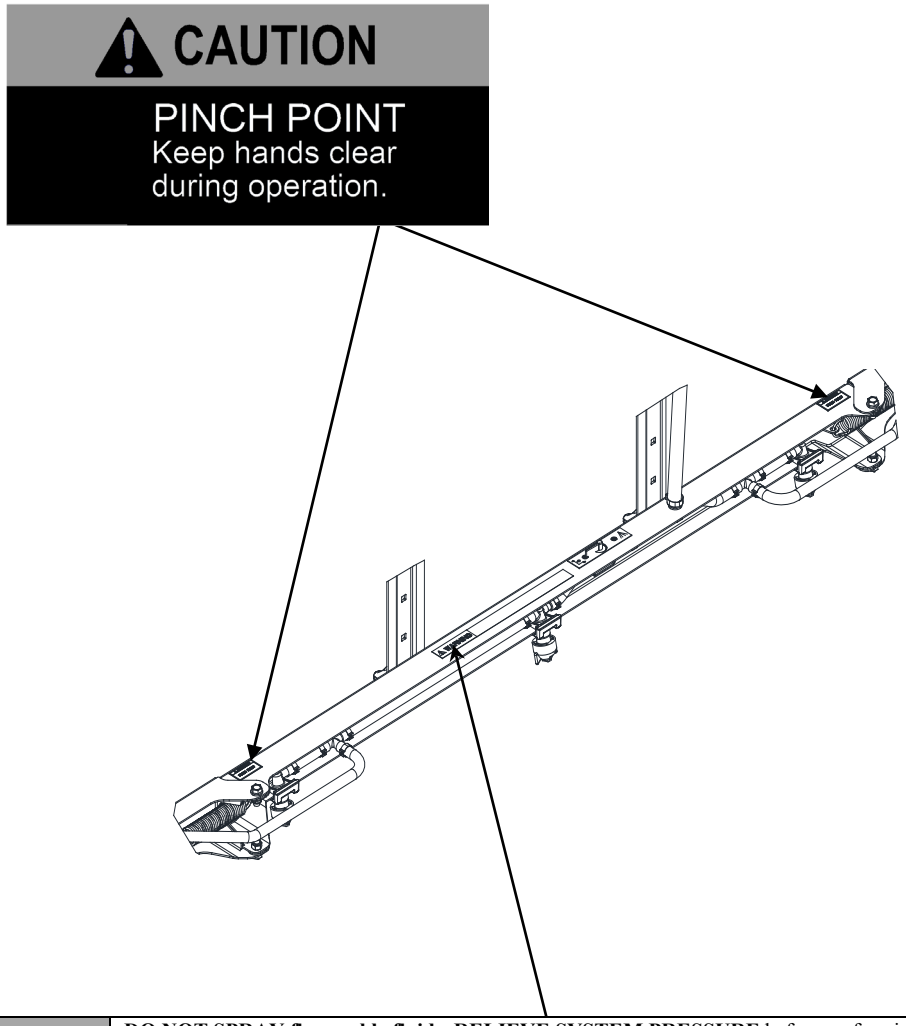

WARNING	**DO NOT SPRAY flammable fluids. RELIEVE SYSTEM PRESSURE** before performing any maintenance. **READ and FOLLOW chemical label instructions.** Pesticides are hazardous chemicals which must be handled carefully. **EXERCISE CAUTION in vehicle handling.** Vehicle will be less stable and handle very differently with filled sprayer and boom attached. **DO NOT TURN ON power to sprayer until ready to spray** in order to avoid inadvertent spray release. **ALWAYS keep the work area clear of people and pets.** Part No. K16-798894

Part#	Description
K16-798894	Boom Chemical Label
K16-798567	Pinch Point Label

Always make sure safety labels are in place and in good condition. If a safety label is missing or not legible, order new labels or unsafe operation could result.
To order replacement safety labels, call Kincrome Customer Service on 1300 657 528.

Unpacking

Closely inspect all contents in the shipping carton.

Note that some parts are shipped inside the tank.

If you have missing or damaged components, please call Kincrome Customer Service on 1300 657 528



Boom Mount
K16-798537
(Qty 2)

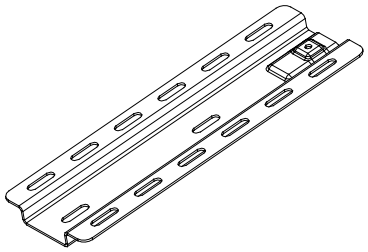

Tank Mount
K16-798538
(Qty 2)

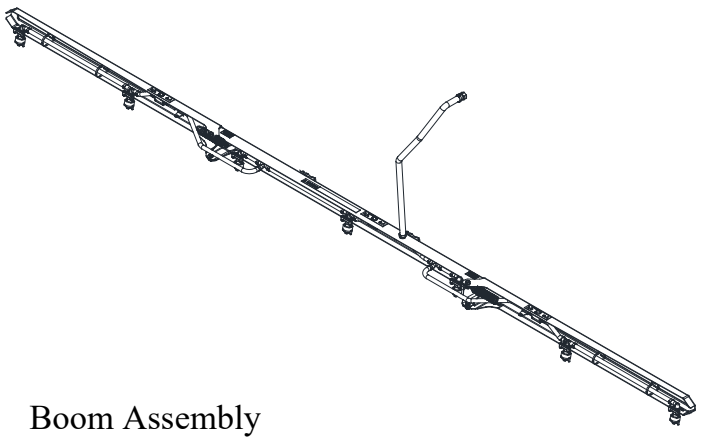

Boom Assembly
(Qty 1)

Unpacking

The following items are found in the manual bag.

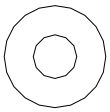

5/16" USS Flat Washer
K16-82021
(Qty 4)

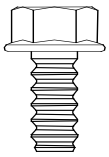

5/16" x 3/4" Bolt
K16-82015
(Qty 4)

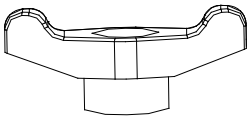

Locking Knob
K16-38578
(Qty 4)

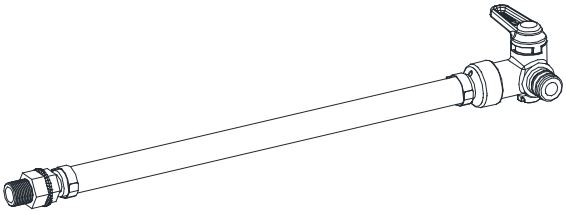

Boom plumbing assembly
(Qty 1)

Assembly

Step 1 – Install tank mounts to bottom of tank for sprayer item # K16006, K16007

Install tank mounts to tank with four 5/16" x 3/4" bolts and washers.
Tighten bolts to 5 Ft-lbs.
Note: - Sprayer item #K16005 does not have threaded inserts in the bottom of the tank. Use straps (not included) to secure tank to tank mounts.

Tools Needed

1/2" Spanner

Fasteners Needed from Owner's Manual Bag:

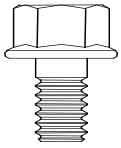

5/16" x 3/4" Bolt
K16-82015
(Qty 4)

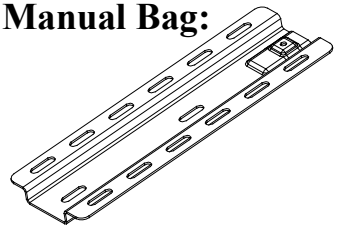

Tank Mount
K16-798538
(Qty 2)

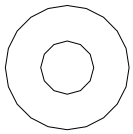

5/16" USS Flat Washer
K16-82021
(Qty 4)

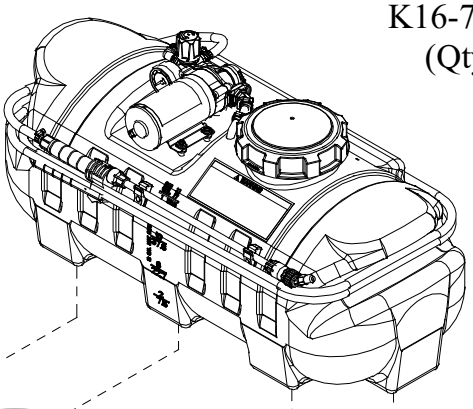

Note orientation of brackets with tank. Tank will be rotated on ATV to face opposite direction.

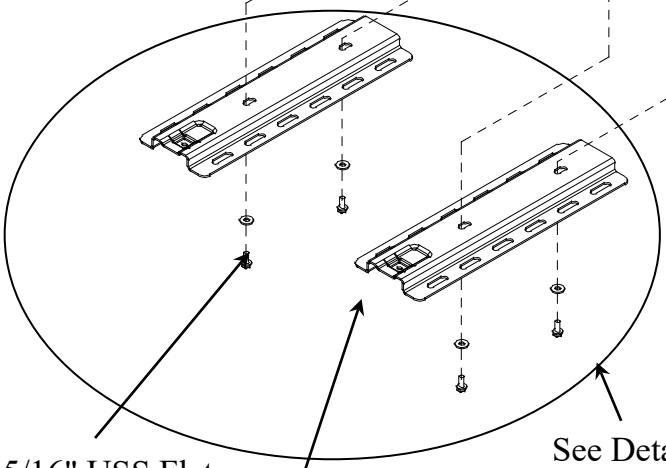

5/16" USS Flat Washer

Tank Mount

See Detail View

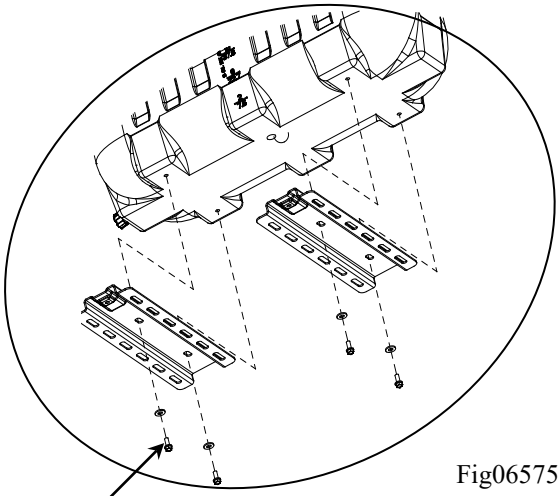

5/16 x3/4" Bolt

Detail View

Fig06575

Assembly

Step 2 - Install boom mounts to tank mounts

Install boom mounts onto two 5/16" x 3/4" bolts in tank mounts.

Install two locking knobs on the top of boom mounts as shown in figure below

Tools Needed

None

Fasteners Needed from Owner's Manual Bag:

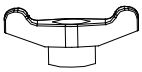

Locking Knob
K16-38578
(Qty 2)



Boom Mount
K16-798537
(Qty 2)

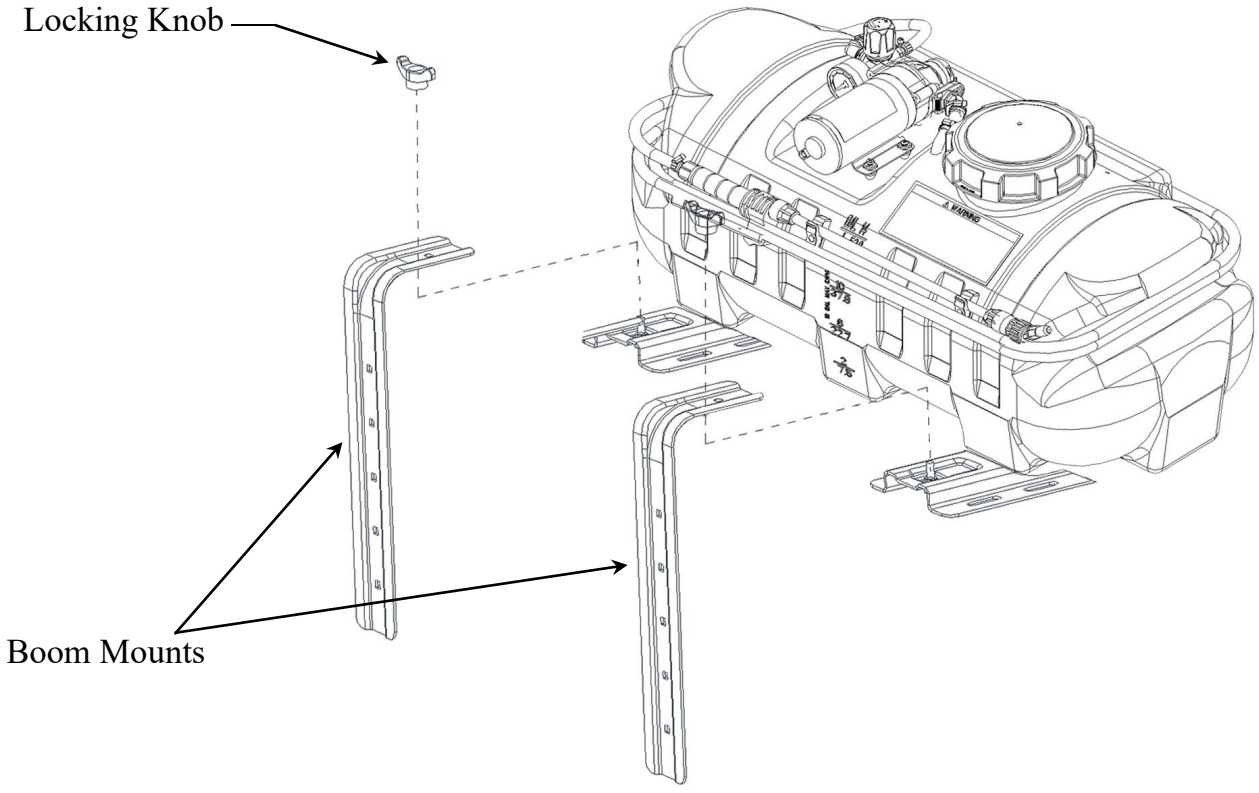

Assembly

Step 3 - Install boom assembly to boom mounts

Install two locking knobs to boom mounts to tighten boom assembly to boom mounts.
Note: Choose boom mounting holes according to sprayer item number.

Tools Needed

None

Fasteners Needed from Owner's Manual Bag:

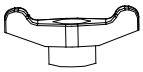

Locking Knob
K16-38578
(Qty 2)

Use **"A"** mounting holes for K16006, K16007

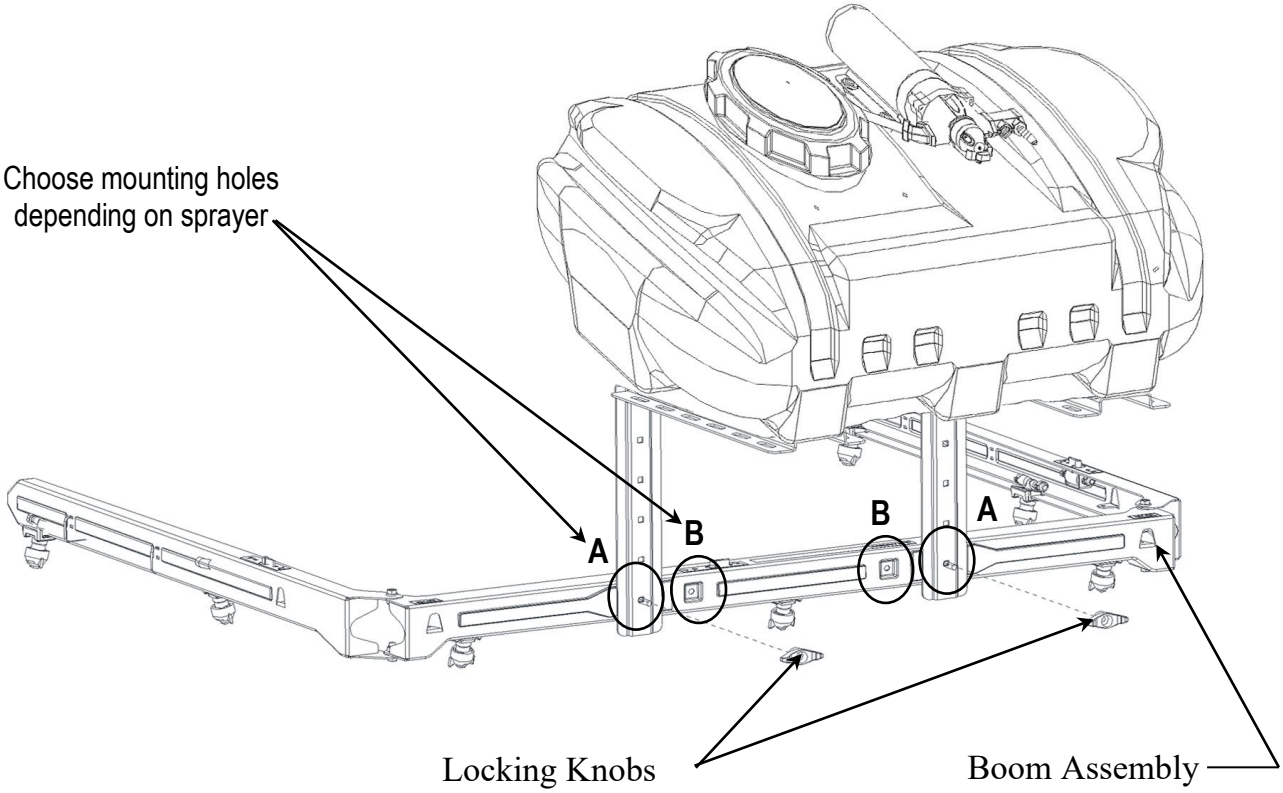

Assembly

Step 4 – For sprayer item # K16006, K16007. Conversion kit is required to make plumbing connection to the pump. See assembly instructions from that kit (included with K16127).

Tools Needed

None

Assembly

Step 5 - Attach boom supply hose to sprayer for sprayer item # K16006, K16007

Thread swivel nut from boom supply hose onto boom connection port.

Tools Needed

None

Components needed from Owner's Manual Bag:

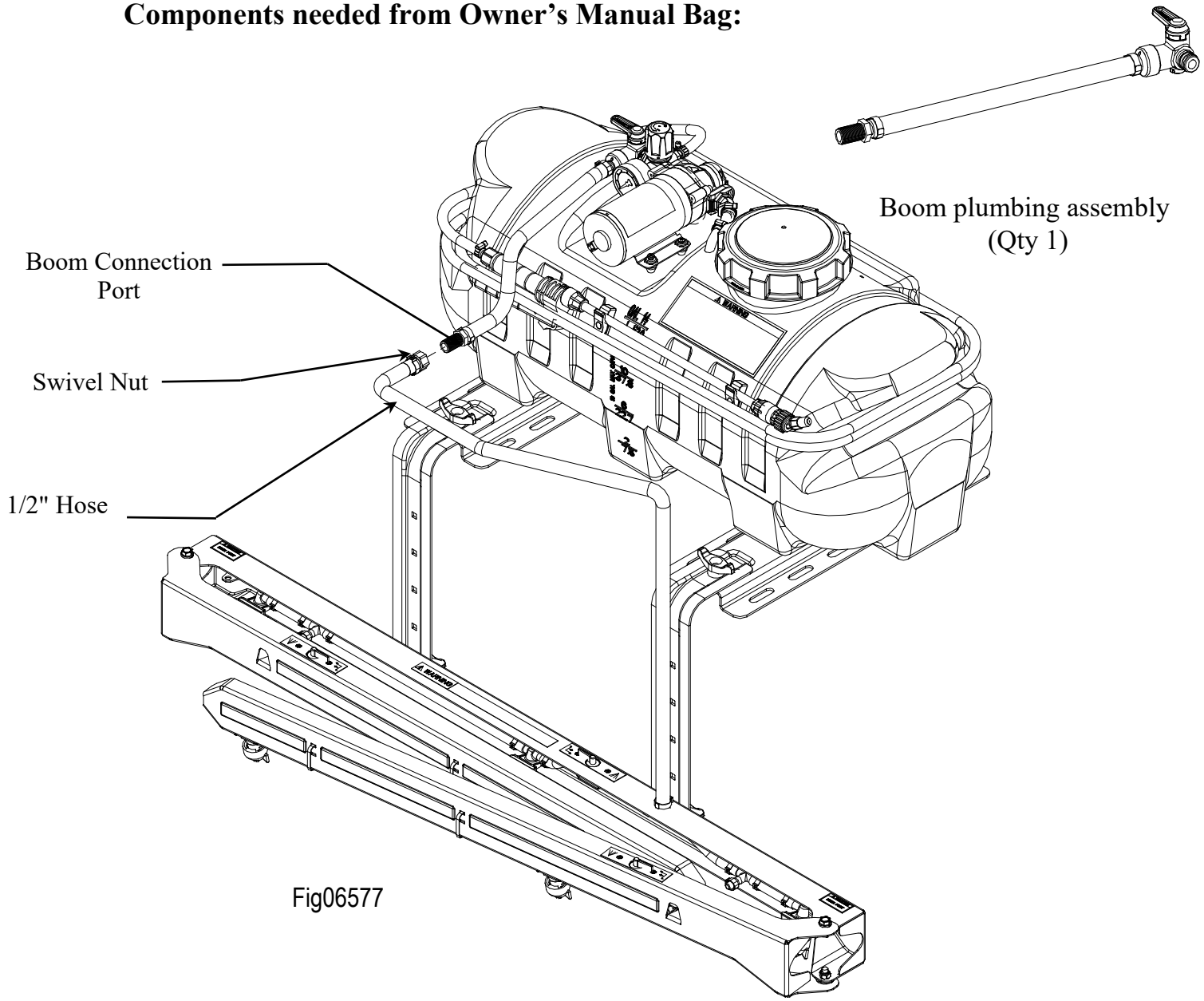

Assembly

<u>Step 6</u>: Check and test completed assembly.

⚠ WARNING

<u>Check and test completed assembly</u>

Serious injury could result from chemical leaks if sprayer is improperly assembled or the design of the sprayer is modified.

Follow the steps below to ensure the sprayer is properly assembled. Never modify the sprayer design.

1. Check assembly	**Check assembly to assure the sprayer is properly assembled and in safe working condition:** a) Check that the gun clip screws are tight, hose clamps are secure, and tank straps are properly fastened. b) While it is unlikely that factory assembled components become loose, they should also be checked to make sure they are tight.
2. Test with water	**Test the system for leaks with water:** a) Partially fill the tank with water. b) Connect the wire harness to the pump power cord and turn the remote switch ON. The pump is an "on demand" pump. When turned on, the pump will prime itself, and then turn off. When the gun trigger is squeezed, the pump will automatically start. c) Operate the spray gun by squeezing the gun trigger. d) Check for leaks throughout the system. If a leak is detected, fix the leak and re-test the system with water.

Operation – Important Safety Information

Now that you have completed and tested your assembly, there is some important safety and health information you need to know with regard to handling and spraying chemicals, as well as vehicle handling with the sprayer attached.

⚠ WARNING

Carefully read and make sure you understand the following safety information before using the sprayer.

General Chemical Safety:

⚠ WARNING

Pesticides are hazardous chemicals.

Heed the warnings below and follow all instructions carefully.

Improper handling of chemicals can result in serious injury or illness, or cause damage to the environment.

Chemical label. ALWAYS READ and FOLLOW all chemical label instructions.
Licensing/regulation. Refer to any applicable licensing restrictions or state/federal regulations with regard to the application of the particular chemical you plan to use.
Emergency procedures. Before handling chemicals, carefully review the "Chemical Accident Procedures" listed later in this section, as well as the "Statement of Practical Treatment" on the chemical label.
Inhalation/contact. ALWAYS take precautions to avoid inhaling or coming into contact with the chemical.
Personal protective equipment. ALWAYS wear protective clothing, eye protection, and chemical-resistant gloves when filling, using and cleaning the sprayer. Wear additional protective gear (such as facemask or apron) as recommended on the chemical label.
Children/pets. Pesticides can be especially toxic to children and animals. ALWAYS exercise extra caution around children. Keep sprayer and all spray materials away from children and animals.
Ventilation. ALWAYS ensure there is adequate ventilation when mixing, pouring, or spraying.
Flammables. NEVER use any flammable chemicals in the sprayer.
Corrosives. DO NOT use corrosive chemicals in the sprayer. They can weaken the sprayer and its parts, resulting in leaks. Check with the chemical manufacturer to ensure chemical is compatible with all components of the sprayer.
Chemical interaction. ALWAYS flush the sprayer before switching chemicals. Different chemicals may interact dangerously with each other.
Chemical storage. ALWAYS store pesticides in a properly labeled container and in a secure location per the manufacturer's recommendations.
Health monitoring. Monitor the health of operators who are frequently exposed to pesticides, as recommended by the chemical label or local/federal regulations.

Operation – Important Safety Information (continued)

Chemical Application Safety:

⚠ WARNING

Caution must be used when spraying chemicals to avoid unsafe exposure to humans and the environment.

Heed the warnings below and follow all instructions carefully.

Before Spraying

Sprayer prep. ALWAYS inspect and prepare the sprayer before use according to the directions provided in this manual.

Keep sprayer off. Do not turn on power to the sprayer until ready to spray in order to avoid unintentional spray release.

Boom nozzles down. Make sure boom nozzles are oriented to spray straight down before starting the sprayer. An incorrectly positioned boom nozzle may spray chemicals on you or others.

Wind speed. NEVER spray when wind speed exceeds 5 KPH in order to minimize spray drift.

Clear area/post. ALWAYS keep the work area clear of people and pets. POST warning notices to restrict access by the public for the period recommended on chemical label.

Operator age. You must be 16 years of age or older to operate this sprayer. Pesticides are especially toxic to children.

During Spraying

Over application. DO NOT over apply pesticide. Apply at a rate recommended by chemical manufacturer. Excess pesticide can be dangerous to humans, damage desirable plants, and contaminate soil and water sources.

Never point gun. NEVER point the spray gun at people or animals.

Children/pets. ALWAYS exercise extra caution when spraying near areas accessible to children and pets.

Eating/smoking. DO NOT eat, drink, smoke, rub your eyes, or touch any part of your bare skin while handling chemicals and spraying.

Heat/flames. DO NOT spray near open flames or sources of heat.

Spills. ALWAYS clean up spills immediately per instructions on the chemical label.

Unattended. ALWAYS turn off vehicle and set brake or block wheels, turn off power to sprayer, and relieve system pressure before leaving sprayer unattended.

Troubleshooting. ALWAYS refer to the safety instructions in the Troubleshooting Section before attempting any repairs.

After Spraying

Clean sprayer. ALWAYS clean the sprayer immediately after use according to the directions provided in this manual.

Decontaminate. ALWAYS decontaminate yourself immediately after you are finished spraying and handling chemicals. Wash all exposed areas of the body with soap and water and remove and launder clothing.

Chemical disposal/storage. ALWAYS dispose of or store remaining chemicals properly as recommended on the chemical label.

Operation – Important Safety Information (continued)

ATV Vehicle Handling Safety:

⚠ WARNING

Serious injury can occur if the ATV on which the sprayer is mounted is driven unsafely.

Driver age. You must be 16 years of age or older to operate the ATV with the sprayer attached.
Less stable. Be aware that all vehicle handling will be affected with the filled sprayer attached. See your ATV's warning label for the hazards associated with driving:

- Too fast
- On paved surfaces
- On inclines or rough terrain.

These hazards will be increased drastically as a result of the additional weight and location of the filled sprayer. The center of gravity will be higher and weight distribution different, causing the ATV to be less stable when braking, turning, and driving. Exercise extra caution in vehicle handling. Use particular caution on sloped or rough surfaces in order to prevent rollover. A vehicle equipped with Roll Over Protection System (ROPS) is recommended if you will be operating on non-level terrain.
Speed limit. DO NOT exceed 5 KPH with sprayer mounted on ATV.
Ride/transport. NEVER ride or transport cargo on the sprayer.

Chemical accident procedures:

⚠ WARNING

Before you fill the sprayer, review the following information with regard to handling accidents.

Chemical spills, sprayer leaks, personal contamination, and poisoning are accident situations which you may encounter. **All require an immediate response – See instructions below.**

Sprayer leak	**In the event that the sprayer develops a leak while spraying chemicals, you must *immediately stop spraying*.** Turn off power to the sprayer and follow the directions below, as applicable.
Bodily chemical contact	**Personal contamination can occur when chemicals splash, spill, or spray directly onto a person.** 1. Follow the emergency first aid instructions on the chemical label listed in the "First Aid" or "Statements of Practical Treatment" section. General procedures include: a) Eyes – immediately flush with water or follow other directions as specified on the chemical label. b) Skin – immediately wash all contaminated skin surfaces with soap and water, or follow directions as specified on the chemical label.

Operation – Important Safety Information (continued)

	c) Clothing – remove contaminated clothing immediately. Dispose of heavily contaminated clothing per the instructions on the chemical label for safe chemical/container disposal. 2. Seek medical advice if instructed on the label, or if the victim experiences symptoms of harmful effects such as burning, swelling, nausea, chest pain, difficulty breathing, dizziness or confusion. When seeking medical advice, be sure to bring the chemical product label.
Poisoning by ingestion or inhalation	**In case of poisoning from ingestion or inhalation:** **If the victim has collapsed or is not breathing, call 000.** Otherwise: 1. If you are the victim, immediately seek assistance from nearby personnel because you may become incapacitated. 2. Immediately follow first aid instructions on chemical label. 3. Call a poison control center for further advice. **In Australia, Call 13 11 26**. Have the chemical label available for reference.
Chemical spills	**Chemical spills must be quickly contained and properly cleaned up.** Refer to the chemical label for any specific clean-up instructions. General procedures include: 1. **Controlling** the spill by stopping the source of the spill. 2. **Containing** the spill so that it does not spread and get into water sources. 3. **Cleaning up** the spill immediately. 4. **Seeking additional advice** from: - *Chemical manufacturer*. See chemical label for contact information. - Contact the APVMA (Australian Pesticides & Veterinary Medicines Authority), by emailing enquiries@apvma.gov.au or calling (02) 6210 4701.

Operation – Using the Boom Kit

Step 1: Assess wind conditions and clear work area.

Before you decide to spray, you must determine whether wind conditions are suitable. You must also restrict access to the work area to ensure the safety of bystanders.

⚠ WARNING

Do not spray if wind speeds are greater than 5 KPH or if there are bystanders in the intended spray area.

1. Assess wind speed	**Assess weather conditions to ensure that it is not too windy to spray.** **DO NOT SPRAY if wind speeds are greater than 5 KPH.** *Visible indication of wind speed*: If leaves are in constant motion or there is any branch movement, DO NOT spray because the wind is too strong.
2. Clear work area	**Clear the work area of all bystanders and pets.** Restrict access by the public for the period recommended on chemical label.

Operation - Using the Boom Kit (continued)

Step 2: Operate the boom kit.

⚠ WARNING

ALWAYS wear personal protective equipment as directed on the chemical label when spraying.

Long pants and sleeves, chemical-resistant gloves, and eye protection are strongly recommended. Additional protective gear may be required depending on the particular pesticide.

1. Review safety information	**Review the "Operation – Important Safety Information"** related to Chemical Application Safety and ATV Vehicle Handling Safety provided in this manual.
2. Wear personal protective equipment	**Wear personal protective equipment as directed on the chemical label.**
3. Close boom valve	**Close boom valve to prevent accidental spray release** 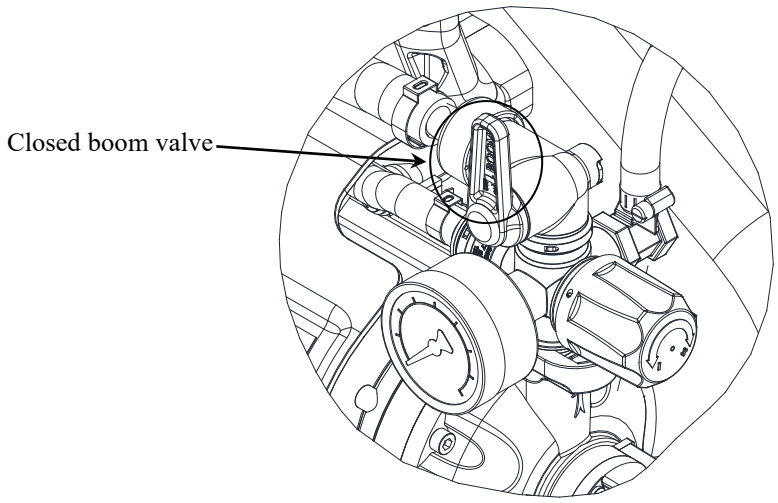
4. Turn on power	**Turn on the power to the sprayer.** 1. Verify the remote switch is connected to the pump power cord. 2. Turn the switch to the "ON" position. *Note: The pump will start automatically when power is turned on. The pump will cycle on and off as needed to retain pressure in the hose.*

Operation - Using the Boom Kit (continued)

5. Adjust pressure regulator

Turn pressure regulator knob to adjust outlet pressure

1. Turn knob clockwise to increase pressure.
2. Turn knob counter-clockwise to decrease pressure

Note: If the pressure regulator knob is completely tightened, the pressure setting will be higher than the pressure switch on the pump. This allows the pump to operate as a demand pump and turn on only when spraying

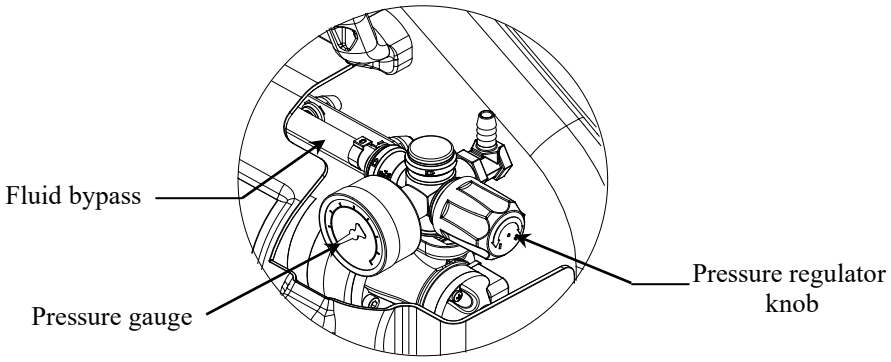

6. Begin agitation if needed

Some formulations of liquid pesticides do not remain in solution and should be agitated to maintain a uniform mix.

The ***pressure regulator*** bypasses fluid back to the tank. Adjust the knob to divert spray back to the tank to keep chemicals well-mixed. It should be used when spraying pesticides classified as "flowable" ("F" or "L"), "wettable powder" ("WP" or "W"), "emulsion" ("EC" or "E"), "microencapsulated" ("M"), or water dispersible granules ("WDG" or "DF"). (See pesticide label to determine its classification.)

7. Operate broadcast boom

A. Open boom nozzle valves
Open the left, right, or both boom valves as desired.

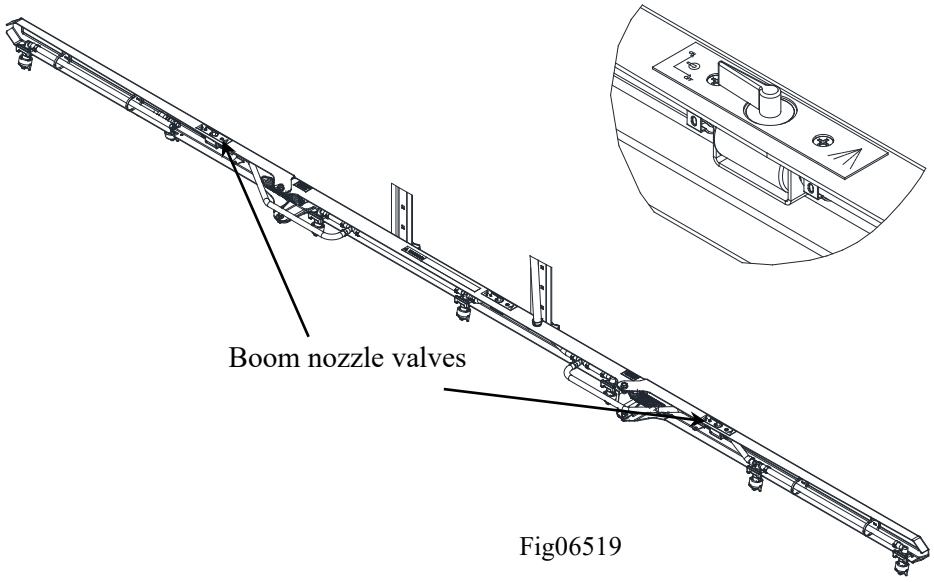

Fig06519

Operation - Using the Boom Kit (continued)

B. Unfold one or both boom arms as required.

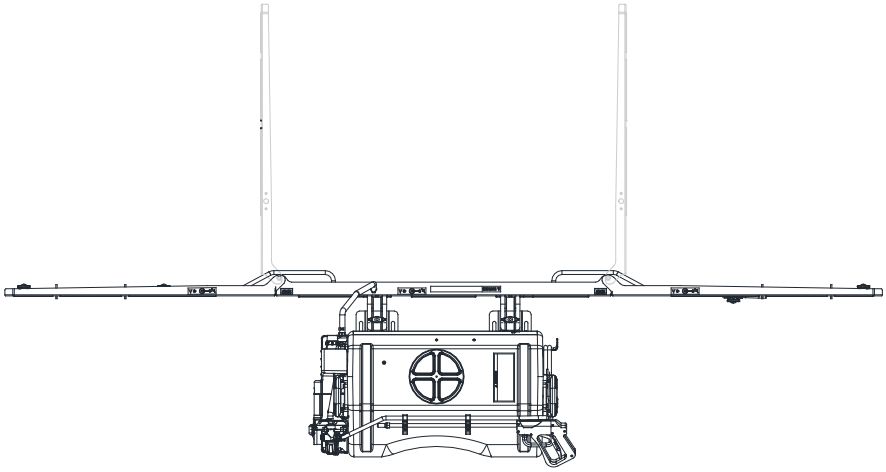

Top view
Fig06520

C. Ensure uniform coverage

To ensure proper coverage, the height of the unfolded boom nozzles should be about 20" from the ground.

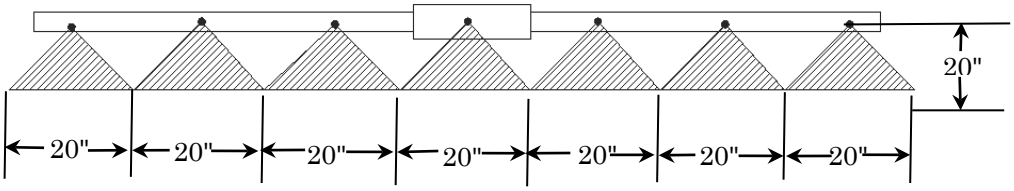

D. Begin to spray

Turn the remote switch ON to begin spraying.

8. Leaving unattended

If the sprayer must be left unattended at any time:

a) Disconnect power to the sprayer.
b) Relieve system pressure by depressing the gun trigger.
c) Turn off the vehicle. Set brake or block the wheels.

9. Discontinue use if clogged or inoperative

If the sprayer becomes clogged or inoperative during use, *discontinue use immediately*.

- DO NOT attempt to service while chemicals are in the sprayer and power is connected.
- Return to service area to review instructions for troubleshooting before attempting to service.

Note: *A clean, reserve container capable of holding enough liquid should be kept for use when the sprayer tank needs to be emptied temporarily for repairs. It is advisable to purchase a reserve tank suitable for pesticide storage from Kincrome for use in these circumstances. The container should be properly labeled as to its contents if it is used.*

Operation - Using the Boom Kit (continued)

Step 3: Clean sprayer and decontaminate after use.

When done using the sprayer, it is important to clean the sprayer and decontaminate yourself. Do not store the sprayer with chemicals in the tank, as it is unsafe and could also result in damage to the equipment.

⚠ WARNING

Clean-up and decontamination procedures must be followed after each use.

Improper equipment clean-up and disposal of chemicals can result in dangerous chemical exposure to humans and the environment, as well as equipment damage.

Personal decontamination is required after spraying to minimize unsafe exposure to chemicals and potential illness.

1. Drain tank	**If there is excess pesticide left in the tank, drain the tank:** a) Disconnect power to the sprayer and relieve system pressure by depressing the gun trigger. b) Find a suitable container in which to drain the unused pesticide. Place it under the tank drain hole. c) While wearing chemical resistant rubber gloves, eye protection, and all other required personal protective equipment, remove the drain cap and allow pesticide to drain into container. d) When tank stops draining, replace drain cap. Tighten securely.
2. Unused chemical	**Properly store or dispose of unused chemical:** a) <u>If the unused pesticide is to be stored for future use</u>: Store all unused pesticide in its original, or a suitably marked, container in a secure location out of the reach of children & animals. b) <u>If remaining pesticide is to be disposed</u>: Properly dispose of the remaining chemical and its container per the chemical manufacturer's recommendation and according to local hazardous waste disposal regulations.
3. Flush sprayer	**Flush the sprayer per the chemical manufacturer's recommendations.** A general procedure is as follows: a) Add fresh water to the tank. b) Reconnect power to the sprayer. c) Operate the spray gun and discharge all rinse water onto an area that can accept dilute pesticide application. d) Add 20 litres of the chemical manufacturer's recommended cleaning solution. Operate the spray gun, collecting the discharged solution if recommended by the manufacturer. e) After flushing, disconnect power to the sprayer and be sure all system pressure is relieved by squeezing the gun trigger. f) Dispose of cleaning solution discharge as recommended by the manufacturer of the solution.
4. Decontaminate & launder	**Decontaminate yourself after you are finished handling chemicals:** a) Remove all clothing worn during spraying and chemical handling. b) Wash all exposed parts of the body with soap and water. c) Launder clothing separately from other wash.

Storage

When not in use, store the sprayer indoors. For long term or winter storage, prepare the sprayer by running antifreeze through the system. This will keep internal parts lubricated, protect against corrosion, and keep the unit from freezing.

CAUTION
The sprayer will be damaged if it freezes. Protect the sprayer from freezing during storage by following the instructions below.

Preparing for storage:

1. Add antifreeze	Pour antifreeze into the pump system. *Some antifreeze contains Ethanol (which is alcohol based and highly flammable.) which should not be used.*
2. Spray briefly	Turn on the pump motor and squeeze the gun trigger briefly until fluid sprays.

Removing from storage:

1. Drain	Drain the antifreeze left in the tank through the tank drain hole into a suitable container.
2. Flush with water	Fill the tank with fresh water and run through the system. Operate the spray gun until the system is completely flushed. Be sure to set up containers to capture the antifreeze flush water.
3. Disposal	Dispose of the antifreeze and flush water properly.

Exploded View – K16127

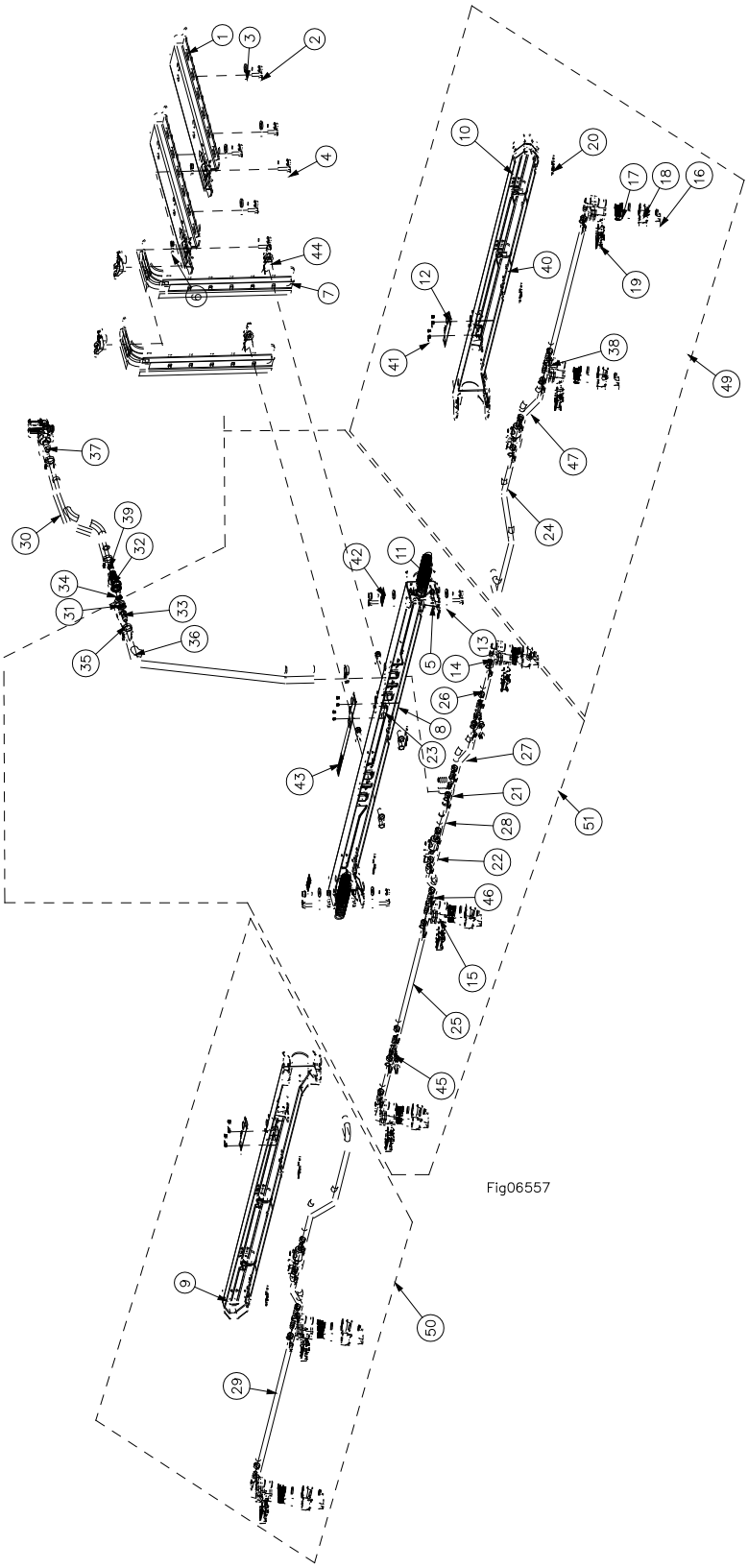

Exploded View – K16127

Ref#	Part#	Description	Qty
1	K16-798538	Tank mount	2
2	K16-82015	5/16"-18 x 3/4" Bolt	8
3	K16-82021	5/16" flat washer	4
4	K16-82016	5/16"-18 x 1" Bolt	4
5	K16-82020	5/16"-18 nyloc nut	6
6	K16-82697	5/16"-18 jam nut	2
7	K16-798537	Boom mount	2
8	K16-799262	Boom, center	1
9	K16-799261	Boom arm, left	1
10	K16-799260	Boom arm, right	1
11	K16-53471	Extension spring	2
12	K16-798359	Decal, valve on/off	3
13	K16004-8	5/16" x 24mm washer	4
14	K16-797716	Nozzle body, single hose barb	4
15	K16-797715	Nozzle body, double hose barb	3
16	K16-798824	Nozzle, fan, 110 degrees, blue	7
17	K16-797593	Nozzle check valve	7
18	K16-797717	Nozzle cap, white	7
19	K16-797701	Clip, nozzle body	7
20	K16-798058	Nozzle body retainer	7
21	K16-797662	1/2" x 3/8" HB tee	1
22	K16003-29	3/8 HB ball valve	3
23	K16-797661	Bracket, ball valve	3
24	K16-798631	3/8" Wire rein. hose, 550mm	2
25	K16-798632	3/8" Wire rein. hose, 375mm	1
26	K16-798633	3/8" Wire rein. hose, 80mm	2
27	K16-798634	3/8" Wire rein. hose, 130mm	1
28	K16-798635	3/8" Wire rein. hose, 100mm	1
29	K16-797708	3/8" Wire rein. hose, 483mm	2
30	K16-798622	1/2" braided PVC hose, 350mm	1
31	K16003-1	Nozzle nut	1
32	K16-777454	Nozzle hose barb	1
33	K16003-10	Swivel nut	1
34	K16-82703	M18 spring lock washer	1
35	K16-798569	1/2" flat seat hose barb for 11/16 nut	1
36	K16-798624	1/2" braided PVC hose, 800mm	1
37	K16-798498	Ball valve	1
38	K16-784436	3/8" hose clamp	21
39	K16-797792	1/2" hose clamp	4
40	K16-791168	Zip tie	4
41	K16-82690	M4-0.7 x 6mm flat head screw	6
42	K16-798567	Decal, pinch point	2
43	K16-798894	Decal, sprayer warning	1
44	K16-38578	Locking knob	4
45	K16004-39	3/8" HB X 3/8" HB X 3/8" HB tee	2
46	K16-797700	Hose, 3/8” preform, boom center	1
47	K16-799470	Hose, 3/8” preform, boom arm	2
48	K16-798799	Hose clamp, 16.2mm ID	6
49	K16-801100	Right boom arm assembly	1
50	K16-801101	Left boom arm assembly	1
51	K16-801102	Boom center assembly	1

Appendix A –Boom Spray Calibration Tables

Below are some guidelines to help you calibrate your tow behind broadcast sprayer. This is a very important step in operating the tow behind broadcast sprayer such that too much or too little chemical may be applied.

1. Using **Table 1,** find a table that corresponds with the chemical manufacturer's suggested application rate (litres per hectare, litres per 1000 sq. m).
2. Find the application rate that is closest to the chemical manufacturer's recommendations.
3. The speed to drive your ATV is listed below the application rates.

TABLE 1

SPRAY HEIGHT	PRESSURE (kPa)	LITRES PER HECTARES – based on water at 51cm spacing						
		3.2 KPH	4.8 KPH	6.4 KPH	8.0 KPH	9.6 KPH	12.9 KPH	16.0 KPH
51cm	207	959	639	479	384	320	239	192
51cm	276	1111	741	556	444	370	278	223
51cm	345	1237	824	618	495	413	309	247

SPRAY HEIGHT	PRESSURE (kPa)	LITRES PER 1000 SQ M – based on water at 51cm spacing						
		3.2 KPH	4.8 KPH	6.4 KPH	8.0 KPH	9.6 KPH	12.9 KPH	16.0 KPH
51cm	207	95.9	63.9	47.9	38.4	32.0	23.9	19.2
51cm	276	111.1	74.1	55.6	44.4	37.0	27.8	22.3
51cm	345	123.7	82.4	61.8	49.5	41.3	30.9	24.7

4. Use **Table 2** to choose the throttle setting on your ATV.

Speed	Time required in seconds to travel a distance of:		
(KM/H)	10 m.	50 m.	100 m.
1	36	180	360
3	12	60	120
5	7	35	70
7	5	25	50
9	4	20	40
12	3	15	30
16	2	11	22

TABLE 2

5. The coverage area can be found by dividing tank size by the application rate.
Example: 117 litres divided by 247 litres/hectare = 0.47 hectare of coverage per tank

Limited Warranty

Dear Valued Customer:

Use this product properly and enjoy the benefits from its high performance. By purchasing a Kincrome product, you show a desire for quality and durability. Like all mechanical equipment this unit requires a due amount of care. Treat this unit like the high quality piece of machinery it is. Neglect and improper handling may impair its performance. Please thoroughly read the instructions and understand the operation before using your product. Always contact Kincrome Customer Service on 1300 657 528 prior to having any service or warranty work performed, as some services performed by parties other than Kincrome approved service centers may void this warranty. This warranty is in lieu of any other warranty expressed or implied and Kincrome assumes no other responsibility or liability outside that expressed within this warranty.

Australian Limited Warranty

Warranty given by Kincrome Australia Pty Ltd of 3 Lakeview Drive, Caribbean Park, Scoresby, Victoria (Tel 1300 657 528). The applicable warranty period (24 months) commences on the date that the product is purchased. If this product has materials or workmanship defects (other than defects caused by abnormal or non warranted use) you can, at your cost, send the product to place of purchase, an authorised Kincrome service agent or one of Kincromes addresses for repair or replacement. Your rights under this warranty are in addition to any other rights you have under the Australian Consumer Law or other applicable laws. Our goods come with guarantees that cannot be excluded under the Australian Consumer Law. You are entitled to a replacement or refund for a major failure and compensation for any other reasonably foreseeable loss or damage. You are also entitled to have the goods repaired or replaced if the goods fail to be of acceptable quality and the failure does not amount to a major failure. For further details please visit www.kincrome.com.au or call us. Due to minor changes in design or manufacture, the product you purchase may sometimes differ from the one shown on the packaging. IMPORTANT! If the tool fails to operate correctly, call customer service on 1800 657 528 for advice on the best resolution for your situation. If a resolution cannot be achieved over the phone please take the tool and all related accessories to an authorised service centre or place of purchase showing proof of purchase for assistance.

KINCROME
PROFESSIONAL QUALITY TOOLS

www.kincrome.com.au