KINCROME

PROFESSIONAL QUALITY TOOLS

SPRAYER BOOM KIT 1 NOZZLE

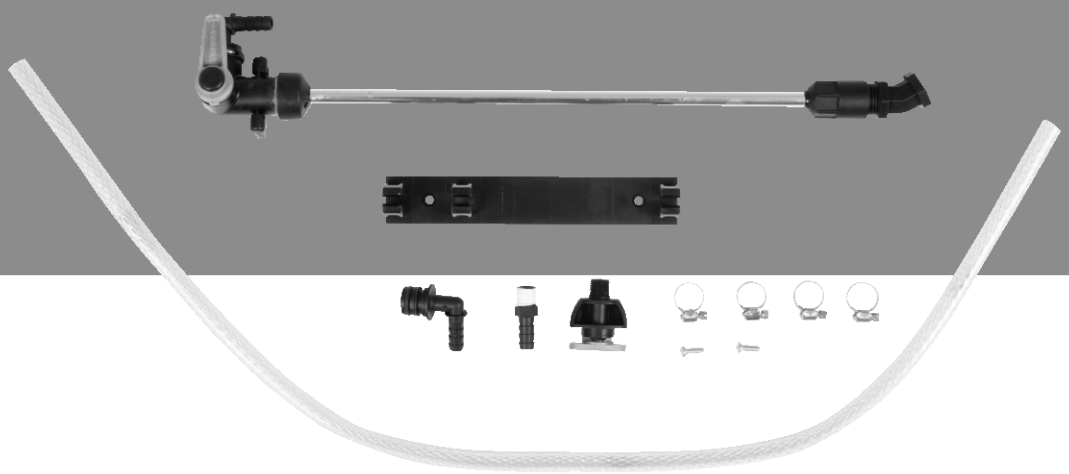

K16128
ED4/SEPTEMBER 19

K16128

ITEM NUMBER: K16128

SERIAL NUMBER: _____

Owner's Manual

Instructions for Assembly and Operation

Broadcast Kit: For outdoor use with agricultural pesticides and other liquids**

⚠ WARNING

READ and UNDERSTAND the Owner's Manual completely before using this sprayer. Assemble, test, and use only in accordance with the Owner's Manual instructions.

READ and FOLLOW chemical label instructions. Pesticides are hazardous chemicals.

KNOW emergency procedures BEFORE handling chemicals. Sprayer leaks, bodily chemical contact, poisoning, and spills require immediate response.

AVOID inhaling, ingesting, or coming into contact with any chemicals.

WEAR personal protective gear when filling, using, cleaning, and servicing the sprayer.

KEEP sprayer and spray materials away from children and pets. Pesticides are especially toxic to them.

EXERCISE CAUTION in vehicle handling when towing/hauling a filled sprayer to avoid loss of control or sprayer overturning.

DO NOT TURN ON POWER to sprayer until ready to spray in order to avoid unintentional spray release.

Improper use of the sprayer or handling of chemicals could result in serious injury or illness to the operator or nearby persons/animals, or could cause damage to the environment.

**This boom is recommended for use in spraying non-flammable liquids such as pesticides and water for dust control. The boom will be damaged and warranty voided if used to apply bleach, chlorine, ice control chemicals, or any petroleum based product (gasoline, diesel, kerosene, oil). The boom should not be used to transfer any product intended for human consumption. WE RECOMMEND THAT THE BOOM NOT BE USED FOR OTHER PURPOSES ONCE IT HAS BEEN USED FOR SPRAYING PESTICIDES. Any chemical will leave some residual in the boom components, even after the boom has been properly cleaned. These residual chemicals can have unexpected effects on future uses. For example, spraying water or other liquids that are contaminated with residual pesticide may result in unforeseen hazards to plant or animal life. This boom should not be used by people with reduced physical, sensory or mental capabilities or lack of experience and knowledge.

Any Questions, Comments or Parts Orders
Call Kincrome Tools + Equipment 1300 657 528

Hazard Signal Word Definitions

	This is the safety alert symbol. It is used to alert you to potential personal injury hazards. Obey all safety messages that follow this symbol to avoid possible injury or death.
⚠DANGER	DANGER (red) indicates an imminently hazardous situation which, if not avoided, will result in death or serious injury.
⚠WARNING	WARNING (orange) indicates a potentially hazardous situation which, if not avoided, could result in death or serious injury.
⚠CAUTION	CAUTION (yellow) indicates a potentially hazardous situation which, if not avoided, may result in minor or moderate injury.
CAUTION	CAUTION (yellow) used without the safety alert symbol indicates a potentially hazardous situation which, if not avoided, may result in property damage. fig01453

Summary of Important Safety Information

⚠ WARNING

Read and understand **this owner's manual** completely before using the sprayer. Read each **chemical label's instructions** before handling the chemical.

Improper use of the sprayer broadcast kit or handling of chemicals could result in serious injury or illness for the operator or nearby persons/animals, or cause damage to the environment.

LISTED BELOW is a summary of safety information of particular importance. See individual sections of this owner's manual for more details.

---------- DURING ASSEMBLY ----------

CHECK and TEST completed assembly as directed in this manual. Serious injury could result from chemical leaks if sprayer is improperly assembled.

DO NOT MODIFY sprayer design.

---------- DURING OPERATION ----------

General Chemical Safety

READ and FOLLOW each chemical label's instructions and warnings.

AVOID inhaling, ingesting, or coming into contact with any chemicals.

KNOW applicable licensing and regulatory requirements for the chemical you plan to use.

KNOW emergency procedures before handling chemicals. Carefully review "Chemical Accident Procedures" listed below and later in this manual. Also see First Aid instructions on the chemical label.

WEAR protective clothing, eye protection, and chemical resistant gloves when filling, using and cleaning the sprayer. Wear additional protective gear, such as facemask or apron, as recommended on the chemical label.

EXERCISE EXTRA CAUTION around children and pets. Pesticides are especially toxic to them. Keep sprayer and spray materials away from them at all times.

DO NOT MIX OR POUR chemicals in an enclosed, unventilated area

DO NOT USE flammable or corrosive chemicals in the sprayer.

FLUSH the sprayer before switching chemicals in order to prevent dangerous chemical interactions.

STORE pesticides in a correctly labeled container and in a secure location.

MONITOR the health of operators frequently exposed to pesticides, as recommended by the chemical label or local/federal regulations.

Chemical Application Safety

Before Spraying

INSPECT and PREPARE sprayer before each use as directed in this manual.

DO NOT TURN ON POWER to sprayer until ready to spray in order to avoid unintentional spray release.

MAKE SURE BROADCAST NOZZLE IS ORIENTED to spray straight down before starting the sprayer. An incorrectly positioned broadcast nozzle may spray chemicals on you or others.

DO NOT SPRAY when wind speed exceeds 6 KPH in order to minimize spray drift.

CLEAR work area of people/ pets and POST warning notices to restrict access for the period recommended on chemical label.

KEEP sprayer and spray materials away from children/pets. Pesticides can be especially toxic to children and animals.

DO NOT ALLOW anyone younger than 16 to operate sprayer since pesticides are especially toxic to children.

Summary of Important Safety Information (continued)

During Spraying

- **DO NOT OVERAPPLY pesticide**. Apply at rate recommended by chemical manufacturer. Excess pesticide can be dangerous to humans/animals, damage desirable plants, and contaminate soil and water sources.
- **DO NOT EAT, DRINK, SMOKE, RUB YOUR EYES, or TOUCH YOUR BARE SKIN while handling chemicals and spraying**.
- **NEVER POINT THE SPRAY GUN at people or animals.**
- **EXERCISE EXTRA CAUTION when spraying near areas accessible to children and pets**.
- **CLEAN up spills immediately** per instructions on the chemical label.
- **TURN OFF vehicle and set brake or block wheels, TURN OFF power to sprayer, and RELIEVE system pressure** before leaving sprayer unattended.
- **SEE Troubleshooting section in the sprayer manual before attempting any repairs**. Wear personal protective equipment and follow safety instructions.

After Spraying

CLEAN sprayer immediately after use according to the directions provided in this manual.
DECONTAMINATE yourself after you are done spraying and have cleaned the sprayer. Wash all exposed areas of the body with soap and water, and remove and launder clothing.
DISPOSE OF or STORE remaining chemicals in secure storage in correctly marked container.

Chemical accident procedures

Immediate response is necessary in the event of sprayer leaks, bodily chemical contact, poisoning, or spills. See instructions below:

Sprayer leak	**If the sprayer develops a leak, *immediately stop spraying***. Turn off power to the sprayer and follow directions below, as applicable.
Bodily chemical contact	**Personal contamination can occur when chemicals splash, spill, or spray directly onto a person.** 1. Immediately follow First Aid instructions on chemical label. General procedures can include: a) Eyes – immediately flush with water. b) Skin – wash all contaminated skin surfaces with soap and water. c) Clothing – remove contaminated clothing. Dispose of heavily contaminated clothing per chemical label instructions. 2. Seek medical advice if instructed on the label or the victim experiences symptoms of harmful effects. Bring the chemical label for reference.
Poisoning by ingestion or inhalation	**In case of poisoning from ingestion or inhalation:** **If the victim has collapsed or is not breathing, call 000.** Otherwise: 1. If you are the victim, immediately seek assistance from nearby personnel because you may become incapacitated. 2. Immediately follow first aid instructions on chemical label. 3. Call a poison control center for further advice. **In Australia. Call 13 11 26**. Have the chemical label available for reference.
Chemical spills	**Chemical spills must be quickly contained and properly cleaned up.** Refer to the chemical label for any specific clean-up instructions. General procedures include: 1. **Controlling** the spill by stopping the source of the spill. 2. **Containing** the spill so that it does not spread and get into water sources. 3. **Cleaning up** the spill immediately. 4. **Seeking additional advice** from: - *Chemical manufacturer*. See chemical label for contact information. - Contact the APVMA (Australian Pesticides & Veterinary Medicines Authority), by emailing enquiries@apvma.gov.au or calling (02) 6210 4701.

Assembly

Step 1: Unpack and inspect parts

Note that some parts are shipped inside the tank.

If you have missing or damaged components, please call Kincrome Customer Service on 1300 657 528

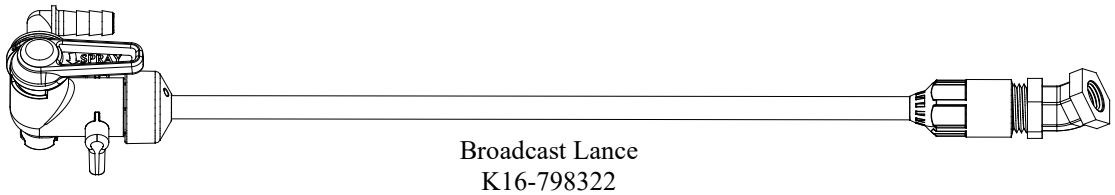

Broadcast Lance
K16-798322
(Qty 1)



Hose
K16-798619
(Qty 1)



Phillips Screw
K16001-12
(Qty 2)

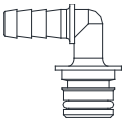

Fitting, QC x 3/8" HB Elbow
K16003-44
(Qty 1)

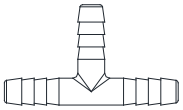

Fitting, 3/8" HB Tee
K16004-39
(Qty 1)

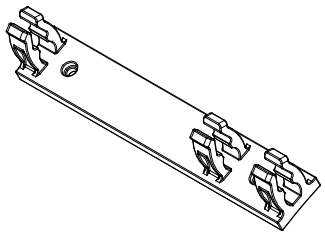

Broadcast Bracket
K16001-16
(Qty 1)

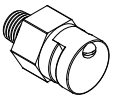

Broadcast Nozzle
K16-798324
(Qty 1)



Hose Clamp
K16000-2
(Qty 4)



Fitting, 1/4" NPT x 3/8" HB
K16001-15
(Qty 1)

Step 2: Attach broadcast bracket to tank

Attach broadcast bracket to tank using (2) Phillips screws. (Note orientation of clips on bracket.)

Sprayer item# K16005, K16006, K16007

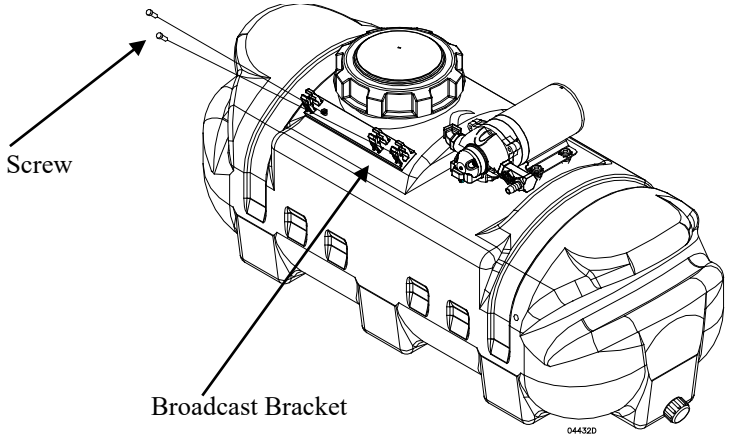

Assembly (continued)

Step 3: Prepare pump outlet

Sprayer item# K16000, K16005
Cut gun hose approximately 4" from pump outlet fitting & add tee.

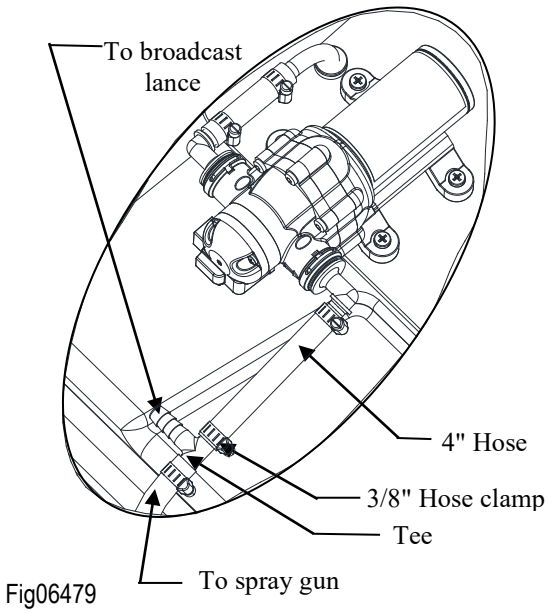

Fig06479

Sprayer item# K16001, K16002, K16006, K16007
Remove hex plug from pump outlet and install fitting, 1/4" NPT x 3/8" HB.

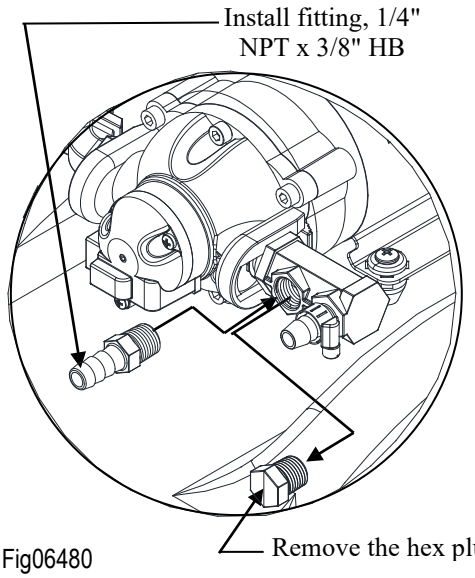

Fig06480

Assembly (continued)

Step 4: Install broadcast lance and make final connections

Sprayer Item# K16000, K16005

1. Push broadcast lance into broadcast bracket. Note orientation.
2. Connect hose from open port on tee to broadcast lance using two hose clamps.
3. Thread broadcast nozzle hand tight onto the end of the lance, then orient with a 7/8" wrench so screw is at 12 o'clock position.

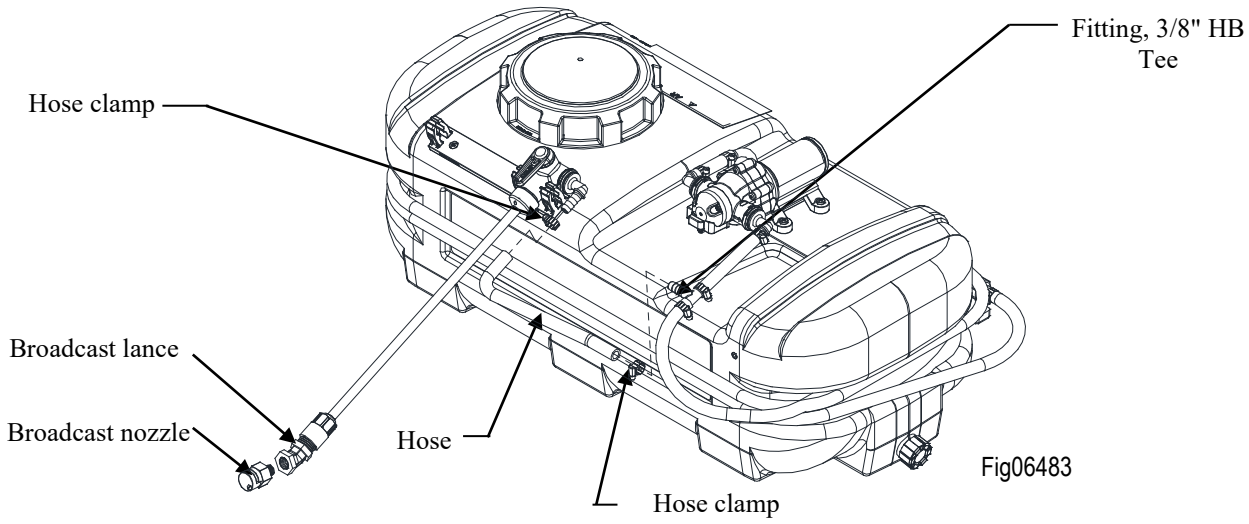

Sprayer Item# K16001, K16002, K16006, K16007

1. Push broadcast lance into broadcast bracket. Note orientation.
2. Connect hose from pump to broadcast lance using two hose clamps.
3. Thread broadcast nozzle hand tight onto the end of the lance, then orient with a 7/8" wrench so screw is at 12 o'clock position.

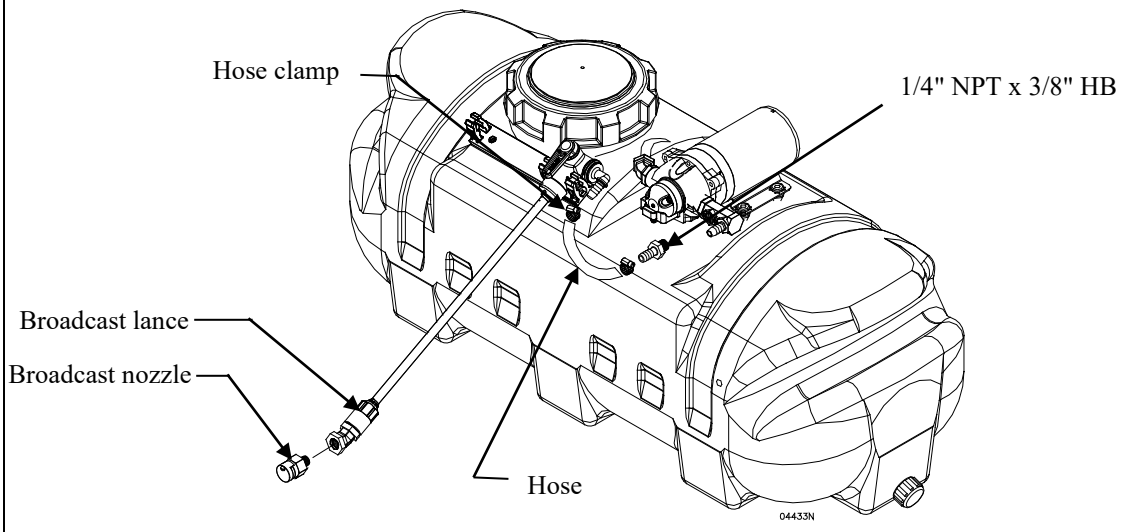

Operation

<u>Step 1</u>: Operate the broadcast kit
Note: See sprayer owner's manual for sprayer operating instructions

⚠ WARNING

ALWAYS wear personal protective equipment as directed on the chemical label when spraying.

Long pants and sleeves, chemical-resistant gloves, and eye protection are strongly recommended. Additional protective gear may be required depending on the particular pesticide.

1. Review safety information	**Review the "Operation – Important Safety Information"** related to <u>Chemical Application Safety</u> and <u>ATV Vehicle Handling Safety</u> provided in this manual.
2. Wear personal protective equipment	**Wear personal protective equipment as directed on the chemical label.**
3. Close broadcast valve	**Turn the broadcast nozzle to the off position.** 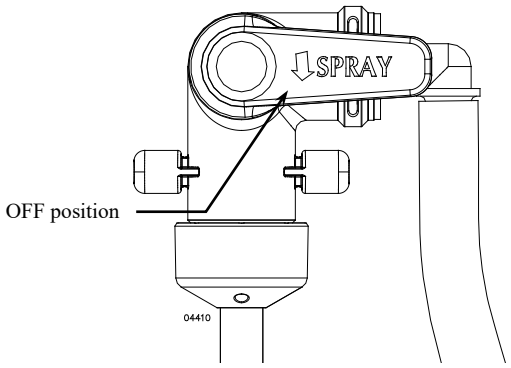
4. Turn on power	**Turn on the power to the sprayer.** 1.Verify the remote switch is connected to the pump power cord. 2.Turn the remote switch to the "ON" position. *<u>Note</u>: The pump will start automatically when power is turned on. The pump will cycle on and off as needed to retain pressure in the hose.*
5. Begin agitation if needed	**Some formulations of liquid pesticides do not remain in solution and should be agitated to maintain a uniform mix.** An optional pressure regulator/ agitator kit (#K16125) is available. Agitation should be used when spraying pesticides classified as "flowable" ("F" or "L"), "wettable powder" ("WP" or "W"), "emulsion" ("EC" or "E"), "microencapsulated" ("M"), or water dispersible granules ("WDG" or "DF"). (See pesticide label to determine its classification.) **Contact Kincrome Product Support on 1300 657 528 for any questions about the appropriate use of the sprayer and/or optional accessories.**

6. Squeeze trigger & adjust nozzle	**To spray, squeeze the gun trigger**. **- Twist the spray nozzle to adjust from a straight stream to hollow cone spray pattern**, as recommended on the chemical label for proper delivery rate. *Note: It is not unusual for the operator to be exposed to chemical drips while adjusting the nozzle – wear chemical resistant gloves.* 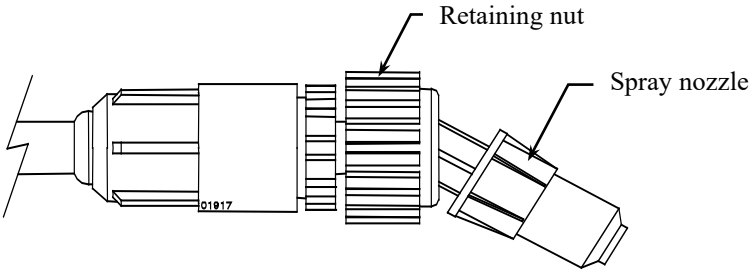

7. Operate broadcast spraying system

A. Move broadcast lance into the broadcast position

Ensure power to the pump is off, then lift the broadcast lance out of its stored position and click the lance into its broadcast position.

Stored position	Broadcast Position
Sprayer Item# K16000, K16005	
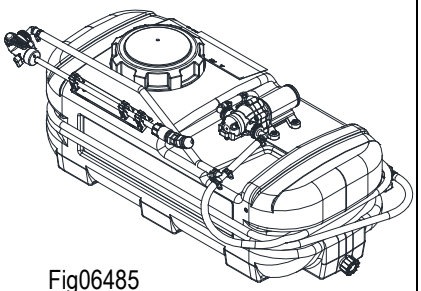 Fig06485	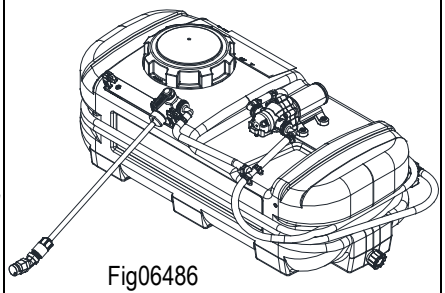 Fig06486
Sprayer Item# K16001, K16002, K16006, K16007	
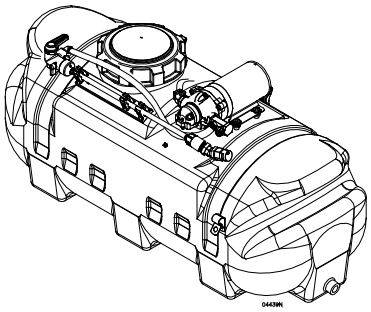	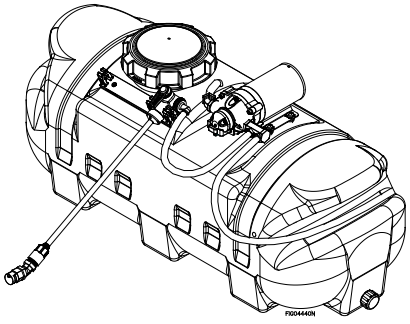

B. Locate broadcast lance valve
Ensure the valve is in the off position.

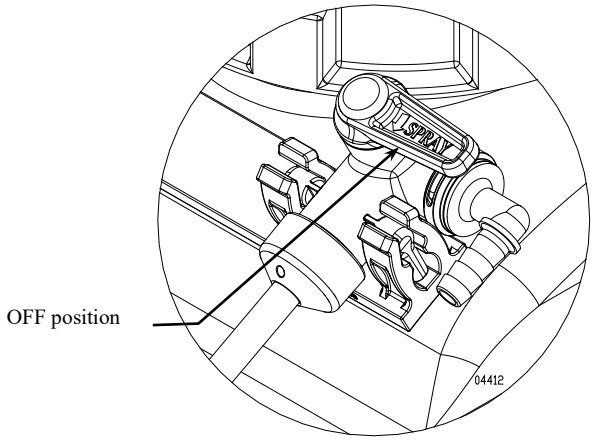

C. Ensure correct spray pattern
Rotate the broadcast nozzle, if needed, so that the spray pattern is pointed down and evenly distributed.

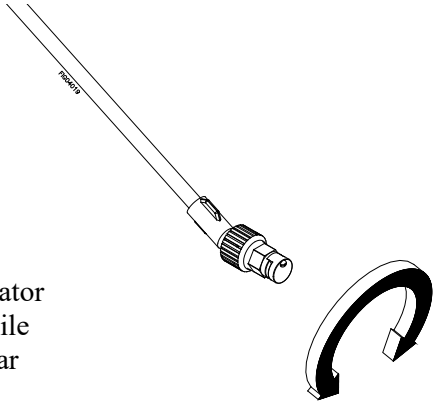

Note: It is not unusual for the operator to be exposed to chemical drips while adjusting the broadcast nozzle. Wear chemical resistant gloves.

D. Begin to spray
Turn the power ON, turn broadcast lance valve to the on position.

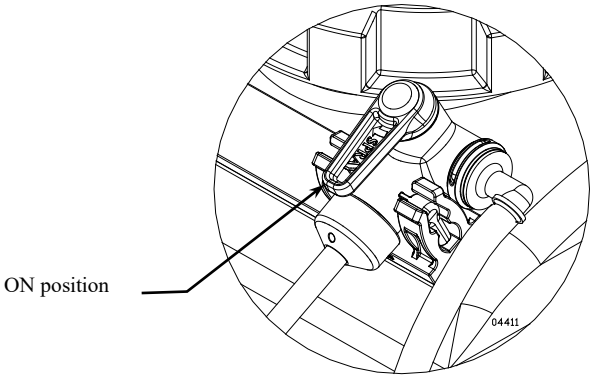

E. Adjust pressure regulator (if equipped)

Turn pressure regulator knob to adjust outlet pressure

1. Turn knob clockwise to increase pressure.
2. Turn knob counter-clockwise to decrease pressure

Note: If the pressure regulator knob is completely tightened, the pressure setting will be higher than the pressure switch on the pump. This allows the pump to operate as a demand pump and turn on only when spraying.

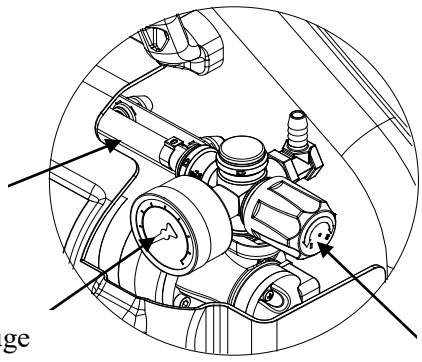

F. Ensure uniform coverage

To ensure proper coverage, overlap the ends of the spray pattern 12". Use the tables in Appendix A to determine what speed to drive your vehicle for the desired application rate.

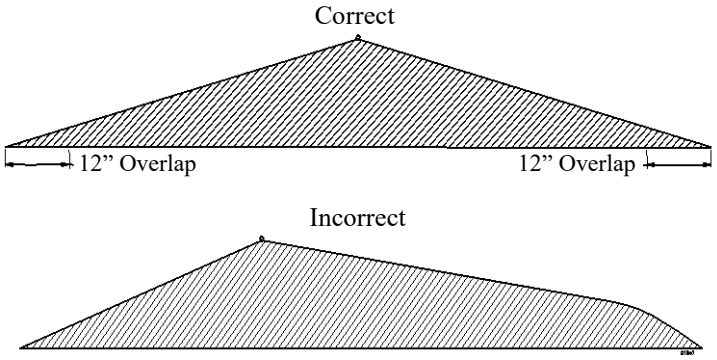

IMPORTANT: Make sure broadcast nozzle is oriented to spray straight down before you start. An incorrectly positioned broadcast nozzle may spray chemicals on you or others.

NOTE!!

Broadcast lance and spot spray gun can be used simultaneously. Use the spot spray gun if you desire to apply pesticide only on selected plants. Use the broadcast nozzle if you wish to spray large ground areas.

7. Leaving unattended	**If the sprayer must be left unattended at any time**: a) Disconnect power to the sprayer. b) Relieve system pressure by depressing the gun trigger. c) Turn off the vehicle. Set brake or chock the wheels.
8. Discontinue use if clogged or inoperative	**If the sprayer becomes clogged or inoperative during use, *discontinue use immediately*.** - DO NOT attempt to service while chemicals are in the sprayer and power is connected. - Return to service area to review instructions for troubleshooting before attempting to service.

Note: *A clean, reserve container capable of holding at least 37 litres (K16005), 60 litres (Model # K16006) or 98 litres (Model # K16007) should be kept for use when the sprayer tank needs to be emptied temporarily for repairs. It is advisable to purchase a reserve tank suitable for pesticide storage from Kincrome for use in these circumstances. The container should be properly labeled as to its contents if it is used.*

Step 2: Clean sprayer and decontaminate after use.

When done using the sprayer, it is important to clean the sprayer and decontaminate yourself. Do not store the sprayer with chemicals in the tank, as it is unsafe and could also result in damage to the equipment.

⚠ WARNING

Clean-up and decontamination procedures must be followed after each use.

Improper equipment clean-up and disposal of chemicals can result in dangerous chemical exposure to humans and the environment, as well as equipment damage.

Personal decontamination is required after spraying to minimize unsafe exposure to chemicals and potential illness.

1. Drain tank	**If there is excess pesticide left in the tank, drain the tank:** a) Disconnect power to the sprayer and relieve system pressure by depressing the gun trigger. b) Find a suitable container in which to drain the unused pesticide. Place it under the tank drain hole. c) While wearing chemical resistant rubber gloves, eye protection, and all other required personal protective equipment, remove the drain cap and allow pesticide to drain into container. d) When tank stops draining, replace drain cap. Tighten securely.
2. Unused chemical	**Properly store or dispose of unused chemical:** a) <u>If the unused pesticide is to be stored for future use</u>: Store all unused pesticide in its original, or a suitably marked, container in a secure location out of the reach of children & animals. b) <u>If remaining pesticide is to be disposed</u>: Properly dispose of the remaining chemical and its container per the chemical manufacturer's recommendation and according to local hazardous waste disposal regulations.
3. Flush sprayer	**Flush the sprayer per the chemical manufacturer's recommendations.** A general procedure is as follows: a) Add fresh water to the tank. b) Reconnect power to the sprayer. c) Operate the spray gun and discharge all rinse water onto an area that can accept dilute pesticide application. d) Add 20 litres of the chemical manufacturer's recommended cleaning solution. Operate the spray gun, collecting the discharged solution if recommended by the manufacturer. e) After flushing, disconnect power to the sprayer and be sure all system pressure is relieved by squeezing the gun trigger. f) Dispose of cleaning solution discharge as recommended by the manufacturer of the solution.
4. Decontaminate & launder	**Decontaminate yourself after you are finished handling chemicals:** a) Remove all clothing worn during spraying and chemical handling. b) Wash all exposed parts of the body with soap and water. c) Launder clothing separately from other wash.

Calibration Tables

Below are some guidelines to help you calibrate your broadcast sprayer. This is a very important step in operating the broadcast sprayer such that too much or too little chemical may be applied.

1. Using **Table 1**, find a table that corresponds with the chemical manufacturer's suggested application rate (litres per hectare, litres per 1000 sq. m., or litres per 100 sq. m.).
2. Find the application rate that is closest to the chemical manufacturer's recommendations.
3. The speed to drive your tractor is listed below the application rates.

TABLE 1

Litres per hectare (based on 91cm spraying height and 4.27m spray pattern)					
Application rate for 8.3 lpm pumps	463	337	154	112	94
Application rate for 3.8 lpm pumps	327	168	112	84	65
Speed To Drive	1.6 KPH	3.2 KPH	4.8 KPH	6.4 KPH	8.0 KPH

Litres per 1000 sq. m. (based on 91cm spraying height and 4.27m spray pattern)					
Application rate for 8.3 lpm pumps	46.3	33.7	15.4	11.2	9.4
Application rate for 3.8 lpm pumps	32.7	16.8	11.2	8.4	6.5
Speed To Drive	1.6 KPH	3.2 KPH	4.8 KPH	6.4 KPH	8.0 KPH

Litres per 100 sq. m. (based on 91cm spraying height and 4.27m spray pattern)					
Application rate for 8.3 lpm pumps	4.63	3.37	1.54	1.12	0.94
Application rate for 3.8 lpm pumps	3.27	1.68	1.12	0.84	0.65
Speed To Drive	1.6 KPH	3.2 KPH	4.8 KPH	6.4 KPH	8.0 KPH

4. Use **Table 2** to choose the throttle setting on your tractor.

Speed	**Time required in seconds to travel a distance of:**		
(KM/H)	**10 m.**	**50 m.**	**100 m.**
1	36	180	360
3	12	60	120
5	7	35	70
7	5	25	50
9	4	20	40
12	3	15	30
16	2	11	22

TABLE 2

5. The coverage area can be found by dividing tank size by the application rate.

Example: 98 litres divided by 65 litres/hectare = 1.5 hectare of coverage per tank.

Limited Warranty

Dear Valued Customer:

Use this product properly and enjoy the benefits from its high performance. By purchasing a Kincrome product, you show a desire for quality and durability. Like all mechanical equipment this unit requires a due amount of care. Treat this unit like the high quality piece of machinery it is. Neglect and improper handling may impair its performance. Please thoroughly read the instructions and understand the operation before using your product. Always contact Kincrome Customer Service on 1300 657 528 prior to having any service or warranty work performed, as some services performed by parties other than Kincrome approved service centers may void this warranty. This warranty is in lieu of any other warranty expressed or implied and Kincrome assumes no other responsibility or liability outside that expressed within this warranty.

Australian Limited Warranty

Warranty given by Kincrome Australia Pty Ltd of 3 Lakeview Drive, Caribbean Park, Scoresby, Victoria (Tel 1300 657 528). The applicable warranty period (24 months) commences on the date that the product is purchased. If this product has materials or workmanship defects (other than defects caused by abnormal or non warranted use) you can, at your cost, send the product to place of purchase, an authorised Kincrome service agent or one of Kincromes addresses for repair or replacement. Your rights under this warranty are in addition to any other rights you have under the Australian Consumer Law or other applicable laws. Our goods come with guarantees that cannot be excluded under the Australian Consumer Law. You are entitled to a replacement or refund for a major failure and compensation for any other reasonably foreseeable loss or damage. You are also entitled to have the goods repaired or replaced if the goods fail to be of acceptable quality and the failure does not amount to a major failure. For further details please visit www.kincrome.com.au or call us. Due to minor changes in design or manufacture, the product you purchase may sometimes differ from the one shown on the packaging. IMPORTANT! If the tool fails to operate correctly, call customer service on 1800 657 528 for advice on the best resolution for your situation. If a resolution cannot be achieved over the phone please take the tool and all related accessories to an authorised service centre or place of purchase showing proof of purchase for assistance.

This page intentionally left blank.



www.kincrome.com.au