KINCROME®

PROFESSIONAL QUALITY TOOLS

SPRAYER BOOM KIT 5 NOZZLES

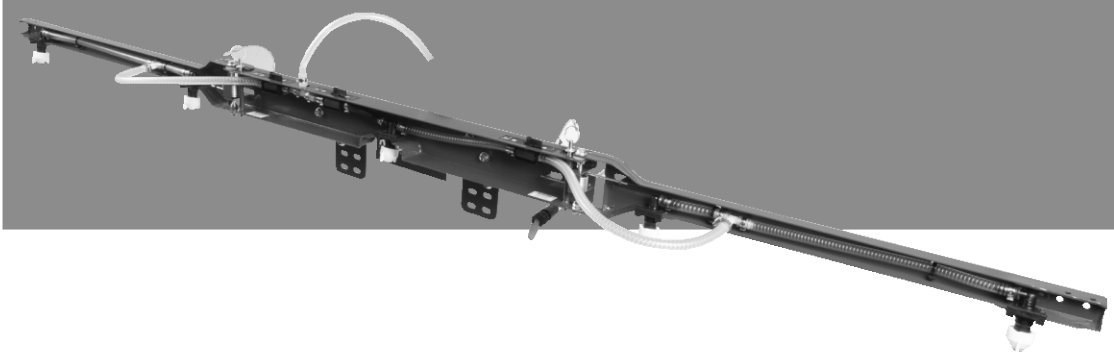

K16130
ED4/SEPTEMBER 19

Hazard Signal Word Definitions

KINCROME
PROFESSIONAL QUALITY TOOLS

ITEM NUMBER: K16130

SERIAL NUMBER: _____

Owner's Manual

Instructions for Assembly, Testing, Operation, Servicing, and Storage

Tow Behind Boom Kit: For outdoor use with non-potable liquids such as agricultural pesticides and other water based liquids**

⚠ WARNING

READ and UNDERSTAND the Owner's Manual completely before using this product. Assemble, test, and use only in accordance with the Owner's Manual instructions.
READ and FOLLOW chemical label instructions. Pesticides are hazardous chemicals.
KNOW emergency procedures BEFORE handling chemicals. Sprayer leaks, bodily chemical contact, poisoning, and spills require immediate response.
AVOID inhaling, ingesting, or coming into contact with any chemicals.
WEAR personal protective gear when filling, using, cleaning, and servicing the sprayer.
KEEP sprayer and spray materials away from children and pets. Pesticides are especially toxic to them.
EXERCISE CAUTION in vehicle handling when towing/hauling a filled sprayer to avoid loss of control or sprayer overturning.
DO NOT TURN ON POWER to sprayer until ready to spray in order to avoid unintentional spray release.
ALWAYS keep a fire extinguisher rated "ABC" nearby.

Improper use of the sprayer or handling of chemicals could result in serious injury or illness to the operator or nearby persons/animals, or could cause damage to the environment.
Only use the cable clamps provided with the sprayer to connect it with the vehicle battery.

**This boom is recommended for use in spraying non-flammable liquids such as pesticides and water for dust control. The boom will be damaged and warranty voided if used to apply bleach, chlorine, ice control chemicals, or any petroleum based product (gasoline, diesel, kerosene, oil). The boom should not be used to transfer any product intended for human consumption. WE RECOMMEND THAT THE BOOM NOT BE USED FOR OTHER PURPOSES ONCE IT HAS BEEN USED FOR SPRAYING PESTICIDES. Any chemical will leave some residual in the boom components, even after the boom has been properly cleaned. These residual chemicals can have unexpected effects on future uses. For example, spraying water or other liquids that are contaminated with residual pesticide may result in unforeseen hazards to plant or animal life. This boom should not be used by people with reduced physical, sensory or mental capabilities or lack of experience and knowledge.

Any Questions, Comments or Parts Orders
Call Kincrome Tools + Equipment 1300 657 528

Hazard Signal Word Definitions

	This is the safety alert symbol. It is used to alert you to potential personal injury hazards. Obey all safety messages that follow this symbol to avoid possible injury or death.
⚠DANGER	DANGER (red) indicates an imminently hazardous situation which, if not avoided, will result in death or serious injury.
⚠WARNING	WARNING (orange) indicates a potentially hazardous situation which, if not avoided, could result in death or serious injury.
⚠CAUTION	CAUTION (yellow) indicates a potentially hazardous situation which, if not avoided, may result in minor or moderate injury.
CAUTION	CAUTION (yellow) used without the safety alert symbol indicates a potentially hazardous situation which, if not avoided, may result in property damage. fig01453

Table of Contents

Intended Use **4**
Summary of Important Safety Information **5**
Unpacking **9**
Unpacking the Manual Bag **10**
Assembly **11**
Operation – Important Safety Information **17**
Operation – Using the Sprayer **21**
Exploded View & Parts List **26**
Appendix A –Broadcast Spray Calibration Tables **28**
Limited Warranty **29**

Intended Use

The boom kit is intended for use in spraying agricultural pesticides and other non-flammable liquids.

SPRAYING PESTICIDES:

Pesticides are hazardous chemicals that must be handled with caution as directed throughout this manual and on the pesticide label. Pesticides are regulated by the Environmental Protection Agency (EPA) and defined as:

> *Any substance or mixture of substances intended for preventing, destroying, repelling, or mitigating any pest. Though often misunderstood to refer only to insecticides, the term pesticide is a comprehensive term that applies to insecticides, herbicides, fungicides, and various other substances used to control pests.*

SPRAYING OTHER LIQUIDS

In addition to spraying pesticides, this boom may be used to spray other **non-flammable** liquids. An example is spraying water for dust control.

WE RECOMMEND WHAT THE BOOM NOT BE USED FOR OTHER PURPOSES ONCE IT HAS ALREADY BEEN USED FOR SPRAYING PESTICIDES. Any chemical will leave some residual in the boom components, even after the boom has been properly cleaned. These residual chemicals can have unexpected effects on futures uses. For example spraying water or other liquids that are contaminated with residual pesticides may result in unforeseen hazards to plant or animal life.

NOTE: The boom will be damaged and warranty voided if used to apply bleach, chlorine, ice control chemicals, or any petroleum based product (gasoline, diesel, kerosene, oil).

Contact Kincrome Product Support on 1300 657 528 for any questions about the appropriate use of the boom kit.

Summary of Important Safety Information

⚠ WARNING

Read and understand **this owner's manual** completely before using the boom kit. Read each **chemical label's instructions** before handling the chemical.

Improper use of the boom kit or handling of chemicals could result in serious injury or illness for the operator or nearby persons/animals, or cause damage to the environment.

LISTED BELOW is a summary of safety information of particular importance. See individual sections of this owner's manual for more details.

---------- DURING ASSEMBLY ----------

CHECK and TEST completed assembly as directed in this manual. Serious injury could result from chemical leaks if sprayer is improperly assembled.
DO NOT MODIFY sprayer design.

---------- DURING OPERATION ----------

General Chemical Safety

READ and FOLLOW each chemical label's instructions and warnings.
AVOID inhaling, ingesting, or coming into contact with any chemicals.
KNOW applicable licensing and regulatory requirements for the chemical you plan to use.
KNOW emergency procedures before handling chemicals. Carefully review "Chemical Accident Procedures" listed below and later in this manual. Also see First Aid instructions on the chemical label.
WEAR protective clothing, eye protection, and chemical resistant gloves when filling, using and cleaning the sprayer. Wear additional protective gear, such as facemask or apron, as recommended on the chemical label.
EXERCISE EXTRA CAUTION around children and pets. Pesticides are especially toxic to them. Keep sprayer and spray materials away from them at all times.
DO NOT MIX OR POUR chemicals in an enclosed, unventilated area
DO NOT USE flammable or corrosive chemicals in the sprayer.
FLUSH the sprayer before switching chemicals in order to prevent dangerous chemical interactions.
STORE pesticides in a correctly labeled container and in a secure location.
MONITOR the health of operators frequently exposed to pesticides, as recommended by the chemical label or local/federal regulations.

Chemical Application Safety

Before Spraying

INSPECT and PREPARE sprayer before each use as directed in this manual.
DO NOT TURN ON POWER to sprayer until ready to spray in order to avoid unintentional spray release.
MAKE SURE BROADCAST NOZZLES ARE ORIENTED to spray straight down before starting the sprayer. An incorrectly positioned broadcast nozzle may spray chemicals on you or others.
DO NOT SPRAY when wind speed exceeds 5 KPH in order to minimize spray drift.
CLEAR work area of people/ pets and POST warning notices to restrict access for the period recommended on chemical label.
KEEP sprayer and spray away from children/pets. Pesticides can be especially toxic to children and animals.
DO NOT ALLOW anyone younger than 16 to operate sprayer since pesticides are especially toxic to children.

During Spraying

DO NOT OVERAPPLY pesticide. Apply at rate recommended by chemical manufacturer. Excess pesticide can be dangerous to humans/animals, damage desirable plants, and contaminate soil and water sources.
DO NOT EAT, DRINK, SMOKE, RUB YOUR EYES, or TOUCH YOUR BARE SKIN while handling chemicals and spraying.
NEVER POINT THE SPRAY GUN at people or animals.

Summary of Important Safety Information (continued)

EXERCISE EXTRA CAUTION when spraying near areas accessible to children and pets.
CLEAN up spills immediately per instructions on the chemical label.

TURN OFF vehicle and set brake or chock wheels, TURN OFF power to sprayer, and RELIEVE system pressure before leaving sprayer unattended.
SEE Troubleshooting section of this manual before attempting any repairs. Wear personal protective equipment and follow safety instructions.

After Spraying
CLEAN sprayer immediately after use according to the directions provided in this manual.
DECONTAMINATE yourself after you are done spraying and have cleaned the sprayer. Wash all exposed areas of the body with soap and water, and remove and launder clothing.
DISPOSE OF or STORE remaining chemicals in secure storage with correctly marked container.

Towing/Hauling Safety

READ towing/hauling safety instructions in your towing/hauling vehicle manual.
DO NOT ALLOW drivers younger than 16 to operate the towing/hauling vehicle with the filled sprayer attached.
MAKE SURE SPRAYER IS SECURELY ATTACHED to vehicle.
EXERCISE CAUTION in vehicle handling when towing/hauling filled sprayer to avoid loss of control or overturning.
- **Keep speed to a minimum** so you can maintain control. Reduce speed prior to turns.
- **Allow for wider turns** and for **more distance to stop**.
- **Avoid any sudden** steering maneuvers, starts, or stops that could create sway.

SLOW DOWN AND EXERCISE EXTRA CAUTION ON SLOPED OR UNEVEN TERRAIN. Pick the most level route possible. Drive up and down slopes when necessary, rather than across. Use a vehicle equipped with a roll over protection system (ROPS) if you will be working on non-level terrain.
BE AWARE of the added length of the sprayer and that visibility may be reduced when making turns or backing up.
DO NOT RIDE or TRANSPORT cargo on the sprayer.
COMPLY WITH all local, state, and federal towing requirements if you will be towing on public roads.
TURN OFF both sprayer and vehicle, and SET BRAKES or CHOCK WHEELS before leaving unattended.
Please fold the boom arms while transporting from one place to another.

Chemical accident procedures

Immediate response is necessary in the event of sprayer leaks, bodily chemical contact, poisoning, or spills.

Sprayer leak	**If the sprayer develops a leak, *immediately stop spraying***. Turn off power to the sprayer and follow directions below, as applicable.
Bodily chemical contact	**Personal contamination can occur when chemicals splash, spill, or spray directly onto a person.** 1. Immediately follow First Aid instructions on chemical label. General procedures can include: a) Eyes – immediately flush with water. b) Skin – wash all contaminated skin surfaces with soap and water. c) Clothing – remove contaminated clothing. Dispose of heavily contaminated clothing per chemical label instructions. 2. Seek medical advice if instructed on the label or the victim experiences symptoms of harmful effects. Bring the chemical label for reference.

Summary of Important Safety Information (continued)

Poisoning by ingestion or inhalation	**In case of poisoning from ingestion or inhalation:** **If the victim has collapsed or is not breathing, call 000.** Otherwise: 1. If you are the victim, immediately seek assistance from nearby personnel because you may become incapacitated. 2. Immediately follow first aid instructions on chemical label. 3. Call a poison control center for further advice. **In Australia. Call 13 11 26**. Have the chemical label available for reference.
Chemical spills	**Chemical spills must be quickly contained and properly cleaned up.** Refer to the chemical label for any specific clean-up instructions. General procedures include: 1. **Controlling** the spill by stopping the source of the spill. 2. **Containing** the spill so that it does not spread and get into water sources. 3. **Cleaning up** the spill immediately. 4. **Seeking additional advice** from: - *Chemical manufacturer*. See chemical label for contact information. - Contact the APVMA (Australian Pesticides & Veterinary Medicines Authority), by emailing enquiries@apvma.gov.au or calling (02) 6210 4701.



Part#	Description
K16-798567	Decal, Pinch Point

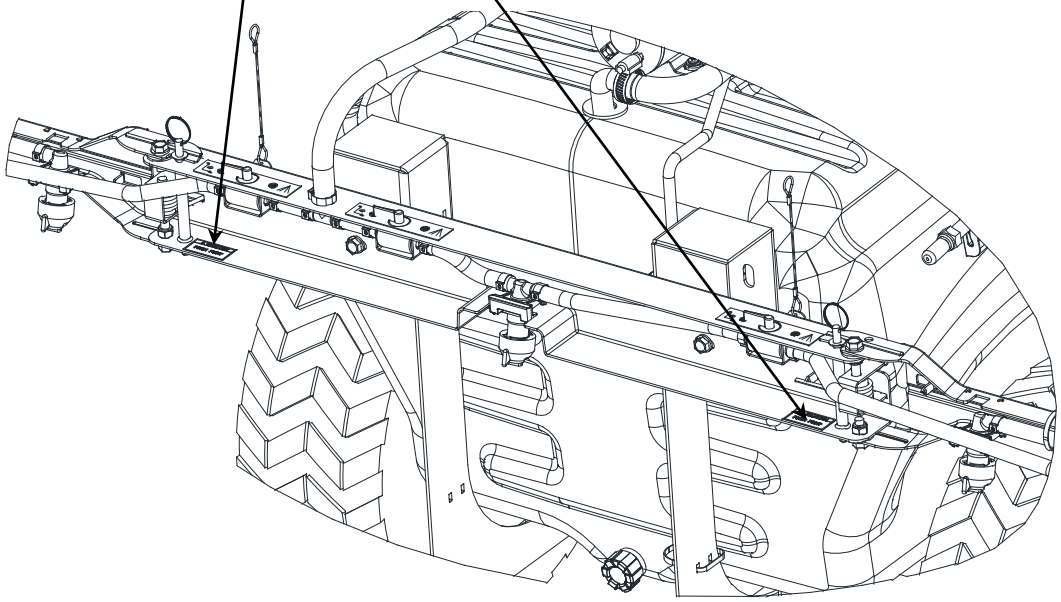

Unpacking

Closely inspect all contents in the shipping carton.

Note that some parts are shipped inside the tank.

If you have missing or damaged components, please call Kincrome Customer Service on 1300 657 528.

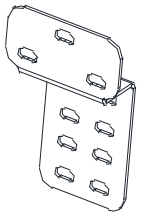

Boom Mount Bracket
K16-799249
(Qty 2)

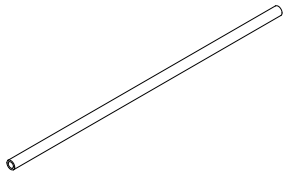

Hose, 3/8” x 442mm
K16-798898
(Qty 2)

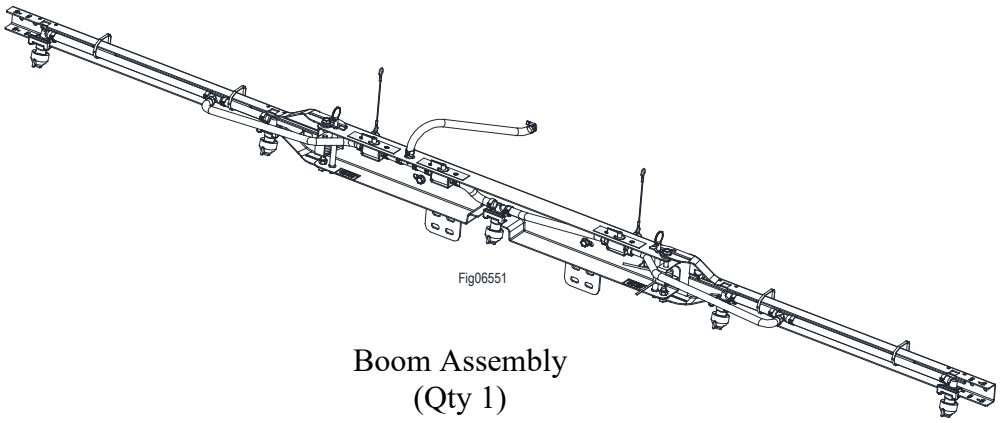

Boom Assembly
(Qty 1)

Unpacking the Manual Bag

Note: Items in this section are found in the manual bag.

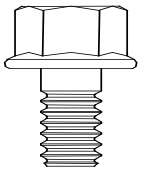

5/16"-18 x 1/2" Bolt
K16001-14
(Qty 4)

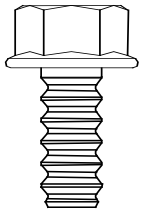

5/16"-18 x 3/4" Bolt
K16-82015
(Qty 4)

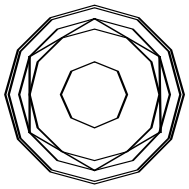

5/16" Flange Nut
K16-82019
(Qty 4)

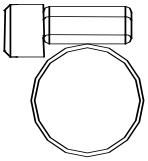

3/8" Hose Clamp
K16000-2
(Qty 5)

Assembly

Step 1 – For removing the existing boom on sprayer.

Disconnect boom supply hose.

Remove old boom assembly from sprayer.

Tools Needed

1/2" Spanner

Screwdriver

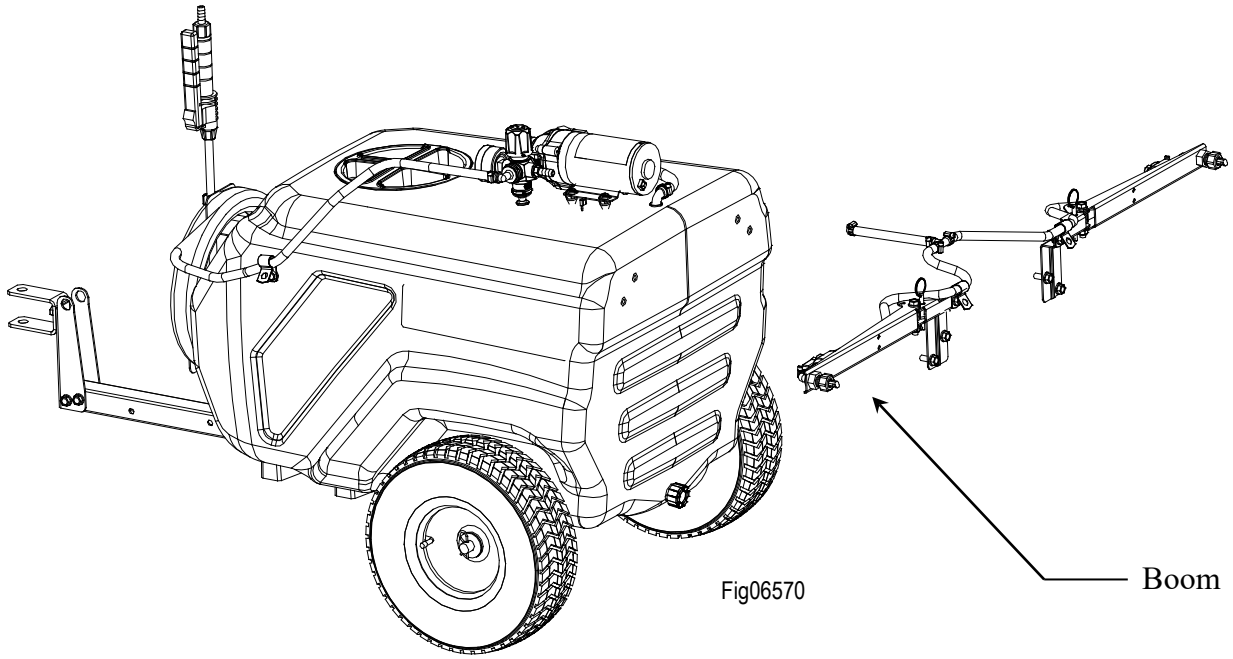

Fig06570

Assembly

Step 2 – Bolt boom mount brackets to tank

Install boom mount brackets to tank with four 5/16"-18 x 1/2" Bolts.
Tighten bolts to 5 Ft-lbs (6.78nM).
Use top four mounting slots.

Nozzle tip should be 20” from ground after assembly

Tools Needed

1/2" Spanner
Torque Wrench

Fasteners Needed from Owner’s Manual Bag:

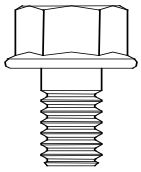

5/16"-18 x 1/2" Bolt
K16001-14
(Qty 4)

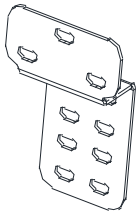

Boom Mount Bracket
K16-799249
(Qty 2)

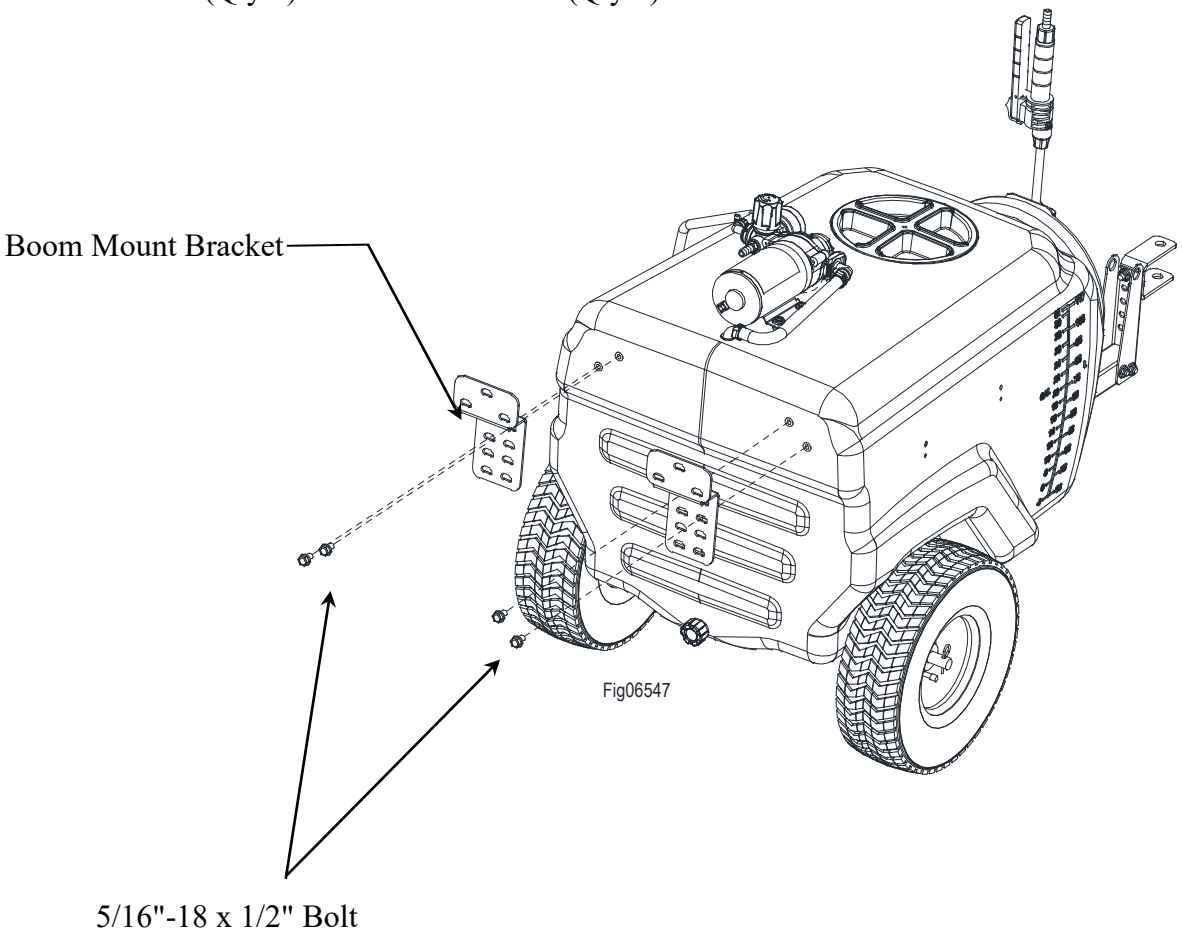

Assembly

Step 3 – Attach boom assembly to boom mount brackets

Install boom assembly to boom mount brackets with four 5/16"-18 x 3/4" bolts and nuts.

Tools Needed

1/2” Spanner

Fasteners Needed from Owner’s Manual Bag:

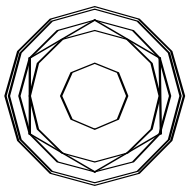

5/16" Flange Nut
K16-82019
(Qty 4)

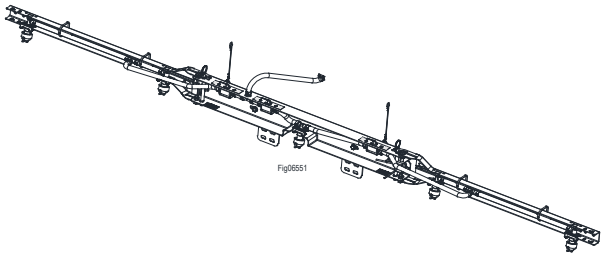

Boom Assembly
(Qty 1)

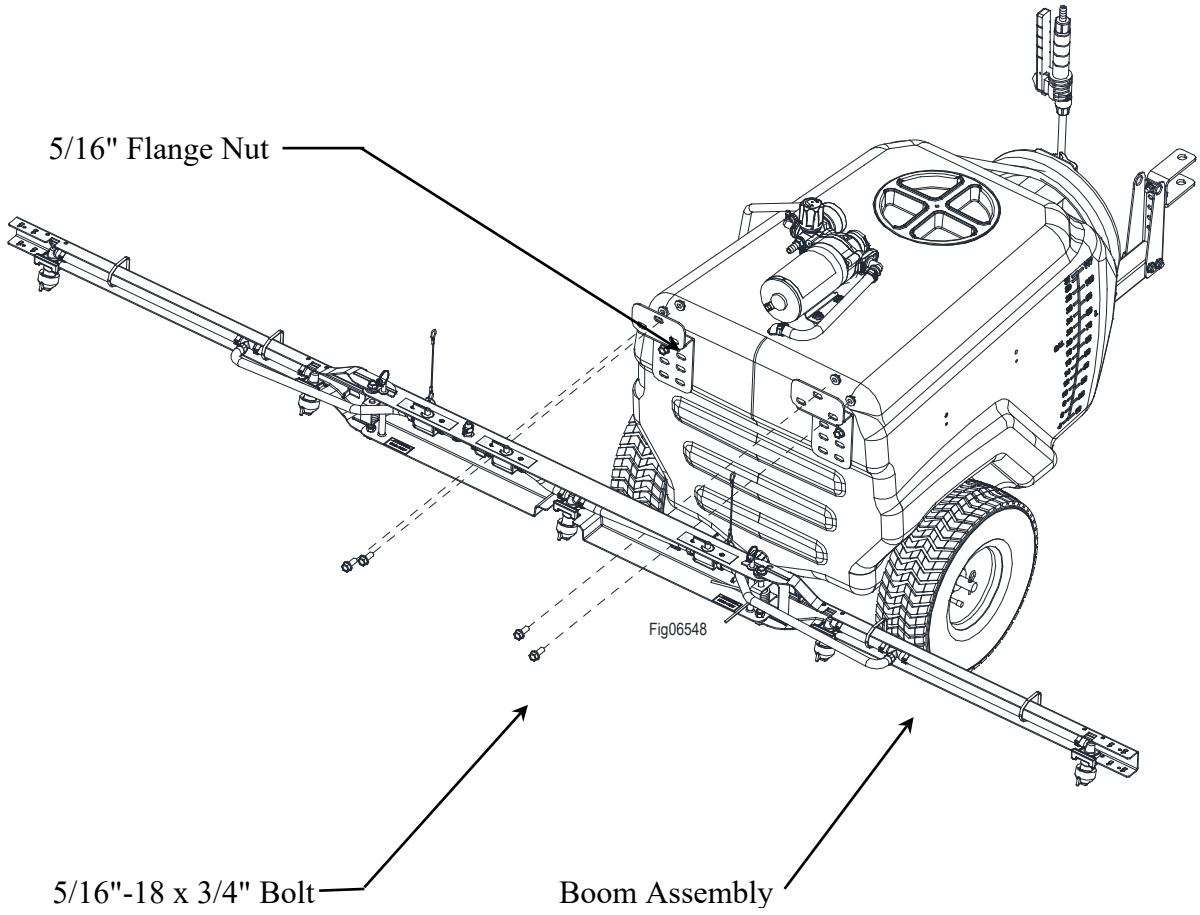

Assembly

Step 4 – Attach boom supply hose to fitting in regulator

Tighten 3/8" hose clamp as shown.

Tools Needed

Flat Head Screw Driver

Fasteners Needed from Owner's Manual Bag:

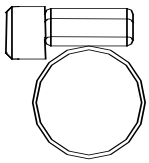

3/8" Hose Clamp
K16000-2
(Qty 1)

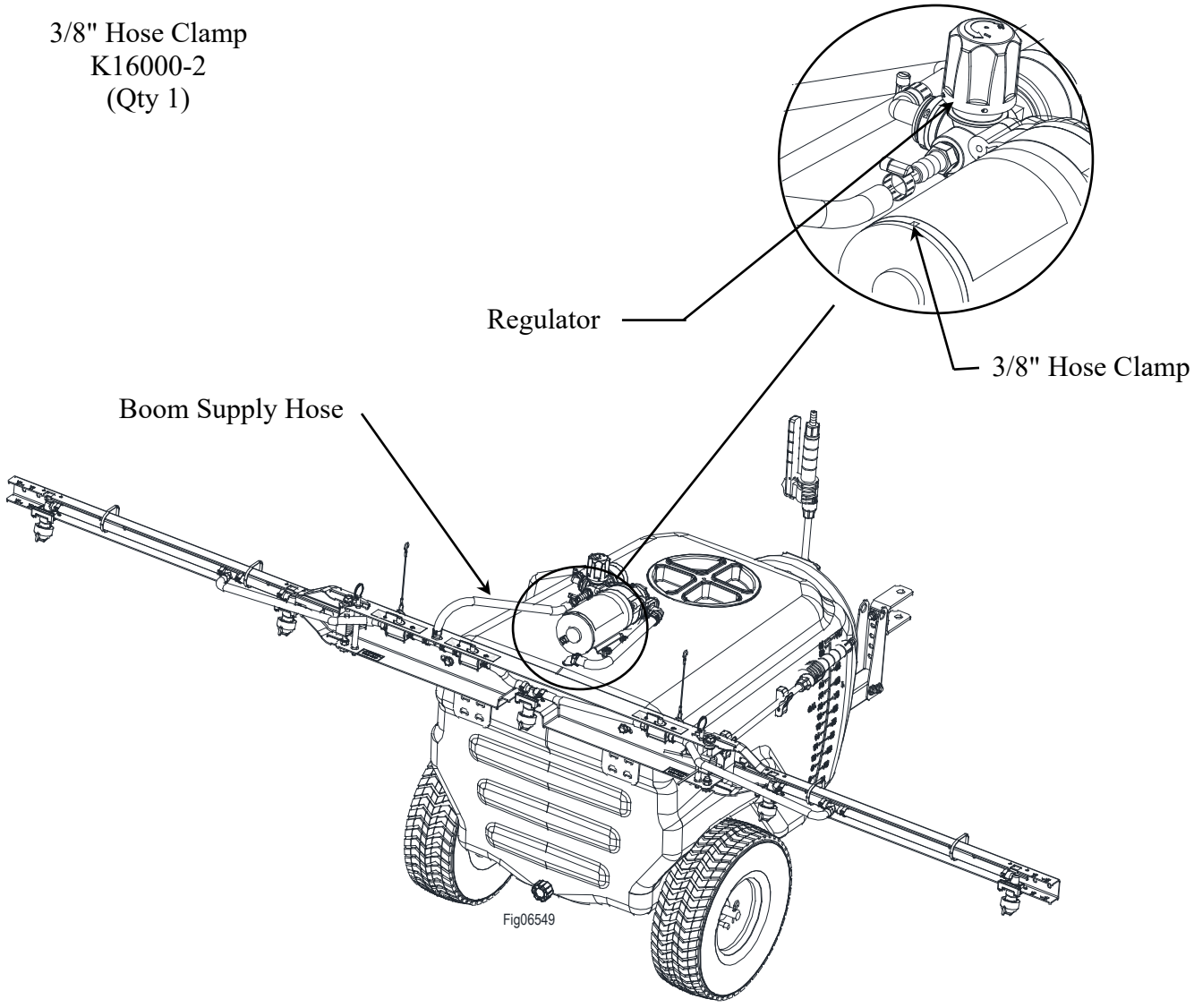

Assembly

Step 5 – Install boom hoses

Install one end of hose to tee and secure it by tightening hose clamp.
Install other end of hose to ball valve hose barb and secure it by tightening hose clamp.
Repeat for other arm.

Tools Needed

Flathead
Screwdriver

Fasteners Needed from Owner's Manual Bag:

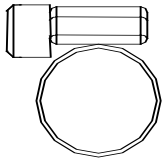

Hose Clamp
K16000-2
(Qty 4)

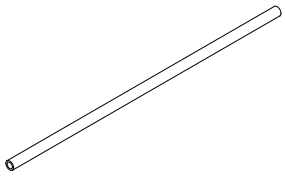

Hose, 3/8" x 442mm
K16-798898
(Qty 2)

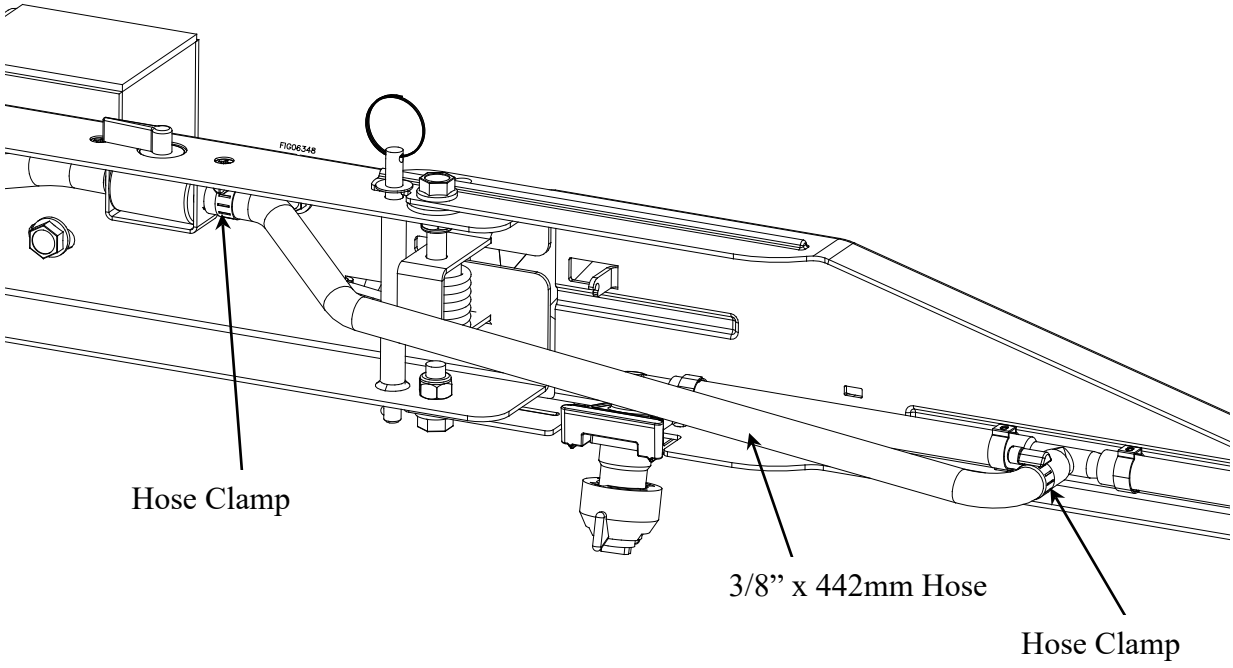

Assembly

<u>Step 6</u>: Check and test completed assembly.

1. Test with water	**Test the system for leaks with water:** a) Partially fill the tank with water. b) Connect the remote switch to the pump power cord and turn the remote switch ON. The pump is an "on demand" pump. When turned on, the pump will prime itself, and then turn off. When the gun trigger is squeezed, the pump will automatically start. c) Operate the spray gun by squeezing the gun trigger. d) Operate the broadcast nozzles by opening the boom valves. e) Check for leaks throughout the system. If a leak is detected, fix the leak and re-test the system with water until no leaks are detected.

Operation – Important Safety Information

Now that you have completed and tested your assembly, there is some important safety and health information you need to know with regard to handling and spraying chemicals, as well as vehicle handling with the sprayer attached.

⚠ WARNING

Carefully read and make sure you understand the following safety information before using the sprayer.

General Chemical Safety:

⚠ WARNING

Pesticides are hazardous chemicals.

Heed the warnings below and follow all instructions carefully.

Improper handling of chemicals can result in serious injury or illness, or cause damage to the environment.

Chemical label. ALWAYS READ and FOLLOW all chemical label instructions.
Licensing/regulation. Refer to any applicable licensing restrictions or state/federal regulations with regard to the application of the particular chemical you plan to use.
Emergency procedures. Before handling chemicals, carefully review the "Chemical Accident Procedures" listed later in this section, as well as the "Statement of Practical Treatment" on the chemical label.
Inhalation/contact. ALWAYS take precautions to avoid inhaling or coming into contact with the chemical.
Personal protective equipment. ALWAYS wear protective clothing, eye protection, and chemical-resistant gloves when filling, using and cleaning the sprayer. Wear additional protective gear (such as facemask or apron) as recommended on the chemical label.
Children/pets. Pesticides can be especially toxic to children and animals. ALWAYS exercise extra caution around children. Keep sprayer and all spray materials away from children and animals.
Ventilation. ALWAYS ensure there is adequate ventilation when mixing, pouring, or spraying.
Flammables. NEVER use any flammable chemicals in the sprayer.
Corrosives. DO NOT use corrosive chemicals in the sprayer. They can weaken the sprayer and its parts, resulting in leaks. Check with the chemical manufacturer to ensure chemical is compatible with all components of the sprayer.
Chemical interaction. ALWAYS flush the sprayer before switching chemicals. Different chemicals may interact dangerously with each other.
Chemical storage. ALWAYS store pesticides in a properly labeled container and in a secure location per the manufacturer's recommendations.
Health monitoring. Monitor the health of operators who are frequently exposed to pesticides, as recommended by the chemical label or local/federal regulations.

Operation – Important Safety Information

Chemical Application Safety:

⚠ WARNING

Caution must be used when spraying chemicals to avoid unsafe exposure to humans and the environment.

Heed the warnings below and follow all instructions carefully.

Before Spraying

Sprayer prep. ALWAYS inspect and prepare the sprayer before use according to the directions provided in this manual.
Keep sprayer off. Do not turn on power to the sprayer until ready to spray in order to avoid unintentional spray release.
Broadcast nozzle down. Make sure broadcast nozzle is oriented to spray straight down before starting the sprayer. An incorrectly positioned broadcast nozzle may spray chemicals on you or others
Wind speed. NEVER spray when wind speed exceeds 5 KPH in order to minimize spray drift.
Clear area/post. ALWAYS keep the work area clear of people and pets. POST warning notices to restrict access by the public for the period recommended on chemical label.
Operator age. You must be 16 years of age or older to operate this sprayer. Pesticides are especially toxic to children.

During Spraying

Over application. DO NOT over apply pesticide. Apply at a rate recommended by chemical manufacturer. Excess pesticide can be dangerous to humans, damage desirable plants, and contaminate soil and water sources.
Never point gun. NEVER point the spray gun at people or animals.
Children/pets. ALWAYS exercise extra caution when spraying near areas accessible to children and pets.
Eating/smoking. DO NOT eat, drink, smoke, rub your eyes, or touch any part of your bare skin while handling chemicals and spraying.
Heat/flames. DO NOT spray near open flames or sources of heat.
Spills. ALWAYS clean up spills immediately per instructions on the chemical label.
Unattended. ALWAYS turn off vehicle and set brake or block wheels, turn off power to sprayer, and relieve system pressure before leaving sprayer unattended.
Troubleshooting. ALWAYS refer to the safety instructions in the Troubleshooting Section before attempting any repairs.

After Spraying

Clean sprayer. ALWAYS clean the sprayer immediately after use according to the directions provided in this manual.
Decontaminate. ALWAYS decontaminate yourself immediately after you are finished spraying and handling chemicals. Wash all exposed areas of the body with soap and water and remove and launder clothing.
Chemical disposal/storage. ALWAYS dispose of or store remaining chemicals properly as recommended on the chemical label.

Operation – Important Safety Information

Towing/hauling Safety:

⚠ WARNING

The filled sprayer is very heavy. It can crush and cause serious injury if it rolls out of control or tips over.

Follow the instructions below for safely towing the sprayer.

Read vehicle instructions. Review towing safety instructions in your towing/hauling vehicle manual.
Driver age. You must be 16 years of age or older to operate the towing/hauling vehicle with the sprayer attached.
Securely attached. Be sure sprayer is securely attached to the towing/hauling vehicle.
Tyres. Make sure sprayer tyres are fully inflated and in good repair before towing. Do not over inflate. Serious injury could occur if tyre explodes.
Vehicle handling. Be aware that vehicle handling will be affected when towing the filled sprayer. Exercise caution to avoid loss of control or sprayer overturning:

- **Keep speed to a minimum** so you can maintain control at all times. Reduce speed prior to turns.
- **Allow for wider turns** and for **more distance to stop**.
- **Avoid any sudden** steering maneuvers, starts, or stops that could create sway.

Rough or sloped terrain. Slow down and exercise extra caution on rough or sloped terrain in order to reduce risk of rollover. Pick the most level route possible when transporting across fields. Drive up and down slopes that cannot be avoided, rather than across. Use a vehicle equipped with a Roll Over Protection System (ROPS) if you will be operating on non-level terrain.
BE AWARE of the added length of the sprayer and that visibility may be reduced when making turns or backing up.
Ride / transport. Never ride or transport cargo on the sprayer.
Under the influence. Never tow or operate this sprayer while under the influence of alcohol, drugs, or medication
On public roads. If towing on a public road, make sure to comply with all local, state, and federal towing requirements. It is the sole responsibility of the purchaser to obtain licensing, trailer lights, safety chains or signage as needed to comply.
Unattended. Turn off both the sprayer and the vehicle, and set the brake or chock the wheels, before leaving the sprayer unattended.

Chemical accident procedures:

⚠ WARNING

Before you fill the sprayer, review the following information with regard to handling accidents.

Chemical spills, sprayer leaks, personal contamination, and poisoning are accident situations which you may encounter. **All require an immediate response – See instructions below.**

Operation – Important Safety Information

Sprayer leak	**In the event that the sprayer develops a leak while spraying chemicals, you must *immediately stop spraying*.** Turn off power to the sprayer and follow the directions below, as applicable.
Bodily chemical contact	**Personal contamination can occur when chemicals splash, spill, or spray directly onto a person.** 1. Follow the emergency first aid instructions on the chemical label listed in the "First Aid" or "Statements of Practical Treatment" section. General procedures include: a) Eyes – immediately flush with water or follow other directions as specified on the chemical label. b) Skin – immediately wash all contaminated skin surfaces with soap and water, or follow directions as specified on the chemical label. c) Clothing – remove contaminated clothing immediately. Dispose of heavily contaminated clothing per the instructions on the chemical label for safe chemical/container disposal. 2. Seek medical advice if instructed on the label, or if the victim experiences symptoms of harmful effects such as burning, swelling, nausea, chest pain, difficulty breathing, dizziness or confusion. When seeking medical advice, be sure to bring the chemical product label.
Poisoning by ingestion or inhalation	**In case of poisoning from ingestion or inhalation:** **If the victim has collapsed or is not breathing, call 000.** Otherwise: 1. If you are the victim, immediately seek assistance from nearby personnel because you may become incapacitated. 2. Immediately follow first aid instructions on chemical label. 3. Call a poison control center for further advice. **In Australia, Call 13 11 26**. Have the chemical label available for reference.
Chemical spills	**Chemical spills must be quickly contained and properly cleaned up.** Refer to the chemical label for any specific clean-up instructions. General procedures include: 1. **Controlling** the spill by stopping the source of the spill. 2. **Containing** the spill so that it does not spread and get into water sources. 3. **Cleaning up** the spill immediately. 4. **Seeking additional advice** from: - *Chemical manufacturer*. See chemical label for contact information. - Contact the APVMA (Australian Pesticides & Veterinary Medicines Authority), by emailing enquiries@apvma.gov.au or calling (02) 6210 4701.

Operation – Using the Sprayer

Step 1: Operate the boom kit.

⚠ WARNING

ALWAYS wear personal protective equipment as directed on the chemical label when spraying.

Long pants and sleeves, chemical-resistant gloves, and eye protection are strongly recommended. Additional protective gear may be required depending on the particular pesticide.

1. Review safety information	**Review the "Operation – Important Safety Information"** related to Chemical Application Safety and ATV Vehicle Handling Safety provided in this manual.
2. Wear personal protective equipment	**Wear personal protective equipment as directed on the chemical label.**
3. Close broadcast/ boom valves	**Close broadcast/boom valves to prevent accidental spray release.** 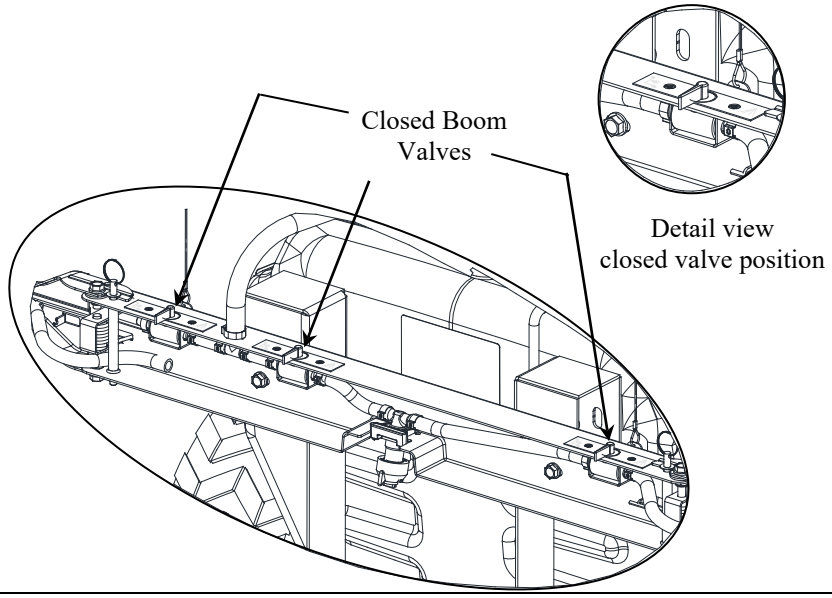
4. Turn on power	**Turn on the power to the sprayer.** 1. Verify the remote switch is connected to the pump power cord. 2. Turn the remote switch to the "ON" position. *Note: The pump will start automatically when power is turned on.*

5. Adjust pressure regulator	**Turn pressure regulator knob to adjust outlet pressure** 1. Turn knob clockwise to increase pressure. 2. Turn knob counter-clockwise to decrease pressure *Note: If the pressure regulator knob is completely tightened, the pressure setting will be higher than the pressure switch on the pump. This allows the pump to operate as a demand pump and turn on only when spraying.* 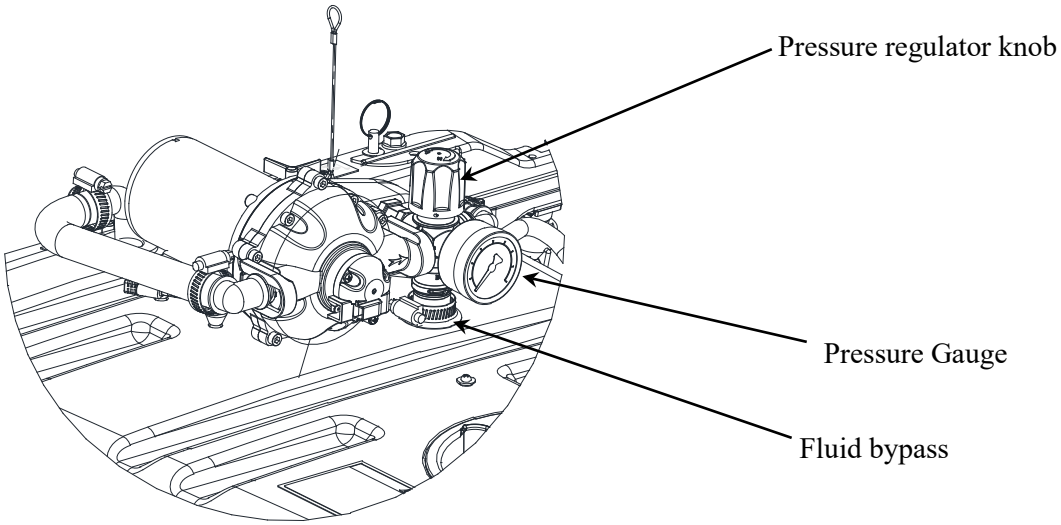
6. Begin agitation if needed	**Some formulations of liquid pesticides do not remain in solution and should be agitated to maintain a uniform mix.** The pressure regulator on this sprayer can be used as an agitator. If the pressure is set below the pump's pressure switch setting, the pump will continue to run even when not spraying. Fluid will be diverted through the pressure regulator back to the tank. This bypass fluid will keep the contents of the tank well-mixed, and allow the sprayer to be used with pesticides classified as "flowable" ("F" or "L"), "wetable powder" ("WP" or "W"), "emulsion" ("EC" or "I"), microencapsulated" ("M"), or "water dispersible granules" ("WDG" or "DF")

7. Operate broadcast boom

A. Open boom valves

Open the left, right, or all valves as desired.

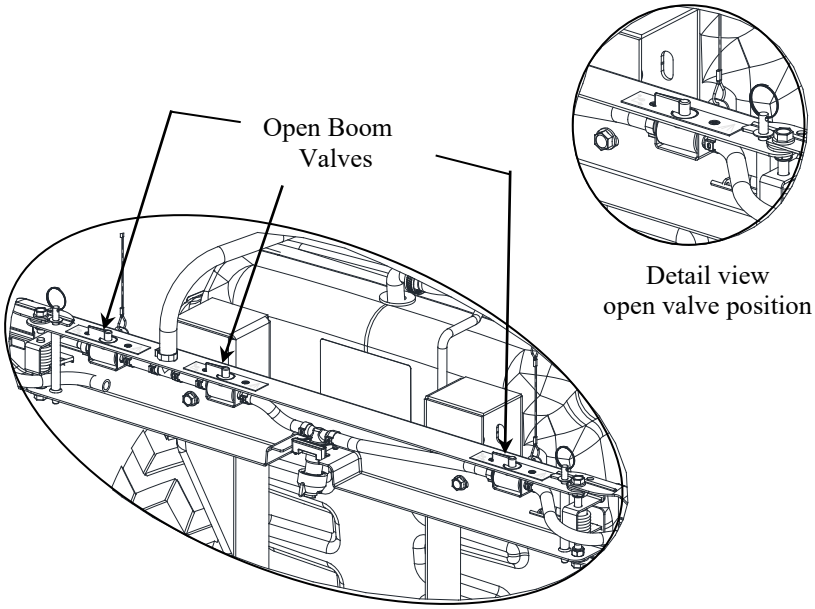

B. Remove pin(s) and unfold one or both boom arms as required. Reinsert pin(s) to secure boom arms.

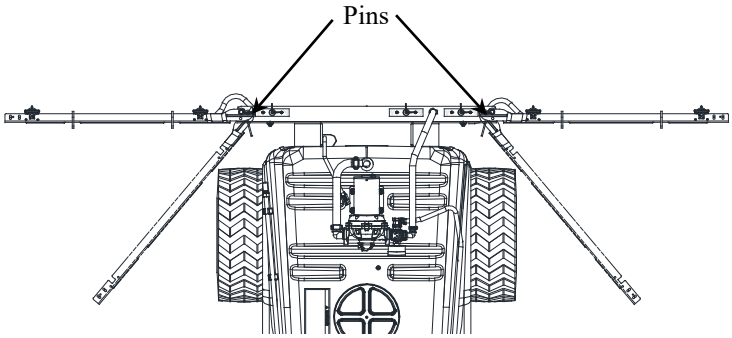

Top view

C. Ensure uniform coverage

To ensure proper coverage, the height of the unfolded boom nozzles should be about 20" from the ground. The sprayer must be level with the ground to get this height.

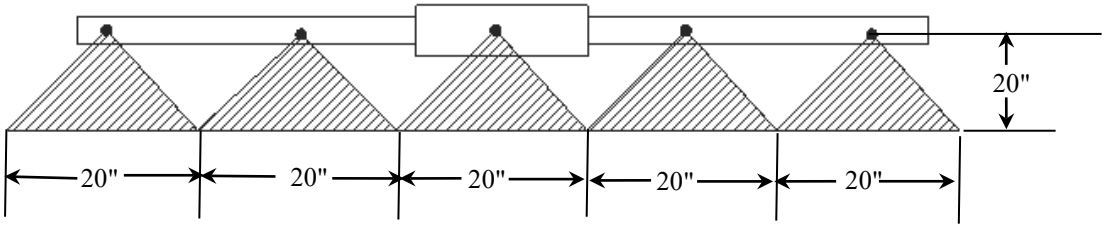

D. Begin to spray

Turn the remote switch ON to begin spraying.

8. Leaving unattended	**If the sprayer must be left unattended at any time**: a) Disconnect power to the sprayer. b) Relieve system pressure by depressing the gun trigger. Turn off the vehicle. Set brake or chock the wheels.
9. Discontinue use if clogged or inoperative	**If the sprayer becomes clogged or inoperative during use, *discontinue use immediately*.** - DO NOT attempt to service while chemicals are in the sprayer and power is connected. c) - Return to service area to review instructions for troubleshooting before attempting to service.

Note: *A clean, reserver container capable of holding enough liquid should be kept for use when the sprayer tank needs to be emptied temporarily for repairs. It is advisable to purchase a reserve tank suitable for pesticide storage from for use in these circumstances. The container should be properly labeled as to its contents if it is used.*

Step 2: Clean sprayer and decontaminate after use.

When done using the sprayer, it is important to clean the sprayer and decontaminate yourself. Do not store the sprayer with chemicals in the tank, as it is unsafe and could also result in damage to the equipment.

⚠ WARNING

Clean-up and decontamination procedures must be followed after each use.

Improper equipment clean-up and disposal of chemicals can result in dangerous chemical exposure to humans and the environment, as well as equipment damage.

Personal decontamination is required after spraying to minimize unsafe exposure to chemicals and potential illness.

1. Drain tank	**If there is excess pesticide left in the tank, drain the tank:** a) Disconnect power to the sprayer and relieve system pressure by depressing the gun trigger. b) Find a suitable container in which to drain the unused pesticide. Place it under the tank drain hole. c) While wearing chemical resistant rubber gloves, eye protection, and all other required personal protective equipment, remove the drain cap and allow pesticide to drain into container. d) When tank stops draining, replace drain cap. Tighten securely.
2. Unused chemical	**Properly store or dispose of unused chemical:** a) If the unused pesticide is to be stored for future use: Store all unused pesticide in its original, or a suitably marked, container in a secure location out of the reach of children & animals. b) If remaining pesticide is to be disposed: Properly dispose of the remaining chemical and its container per the chemical manufacturer's recommendation and according to local hazardous waste disposal regulations.
3. Flush sprayer	**Flush the sprayer per the chemical manufacturer's recommendations.** A general procedure is as follows: a) Add fresh water to the tank. b) Reconnect power to the sprayer. c) Operate the spray gun and discharge all rinse water onto an area that can accept dilute pesticide application. d) Add 5 gallons of the chemical manufacturer's recommended cleaning solution. Operate the spray gun, collecting the discharged solution if recommended by the manufacturer. e) After flushing, disconnect power to the sprayer and be sure all system pressure is relieved by squeezing the gun trigger. f) Dispose of cleaning solution discharge as recommended by the manufacturer of the solution.
4. Decontaminate & launder	**Decontaminate yourself after you are finished handling chemicals:** a) Remove all clothing worn during spraying and chemical handling. b) Wash all exposed parts of the body with soap and water. c) Launder clothing separately from other wash.

Exploded View & Parts List

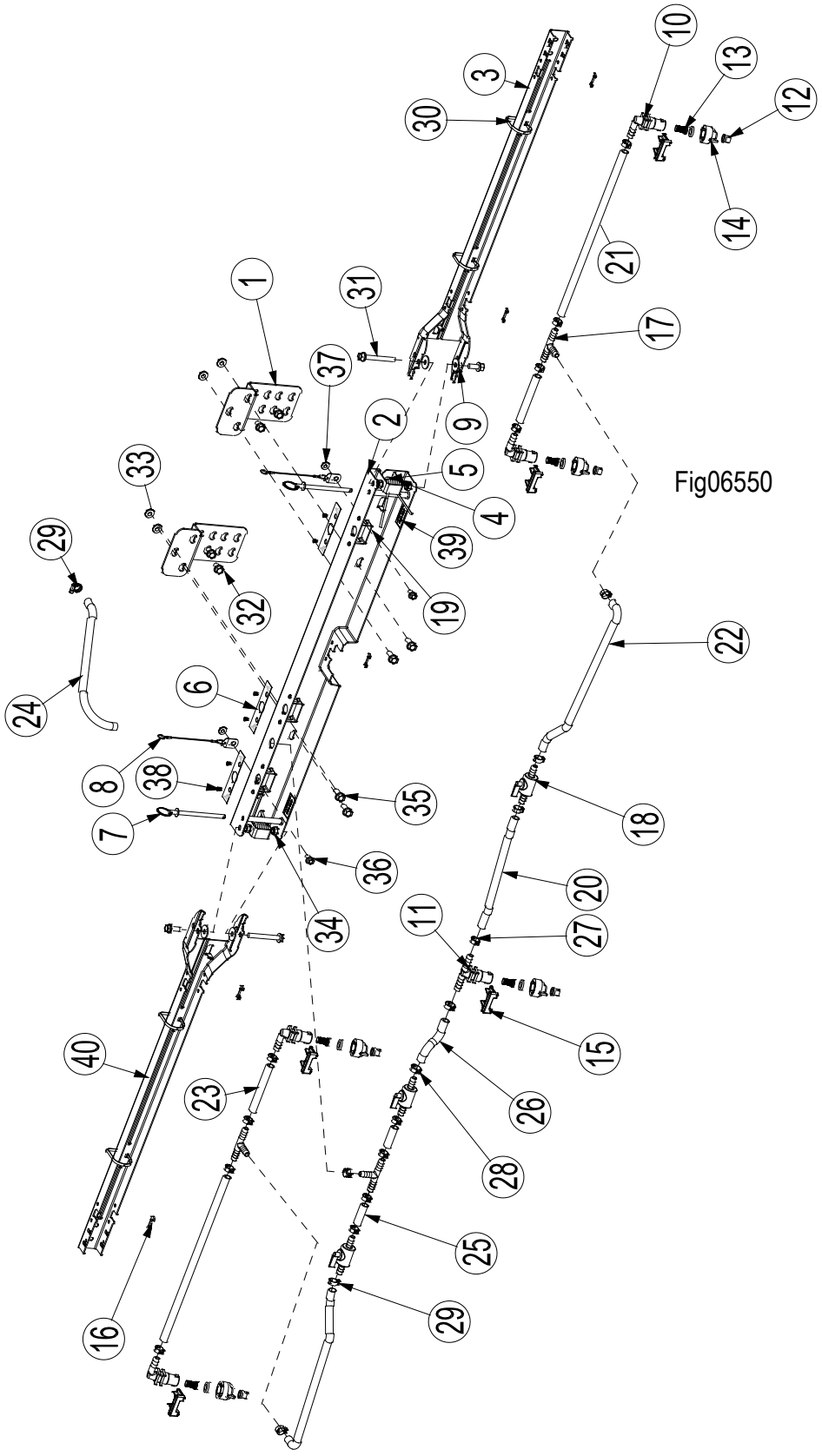

Exploded View & Parts List

Ref#	Part #	Description	Qty
1	K16-799249	Boom mount bracket	2
2	K16-799248	Boom center weldment	1
3	K16-800759	Boom arm weldment, right	1
4	K16-797604	Torsion spring	2
5	K16-797758	Bushing, spring	2
6	K16-798359	Decal, valve on/off	3
7	K16-797759	Locking pin	2
8	K16004-50	Steel wire lanyard	2
9	K16004-8	5/16" x 24mm washer	4
10	K16-797716	Nozzle body, single hose barb	4
11	K16-797715	Nozzle body, double hose barb	1
12	K16-799392	Nozzle, fan, 110 degrees, red	5
13	K16-797593	Nozzle check valve	5
14	K16-797717	Nozzle cap, white	5
15	K16-797701	Clip, nozzle body	5
16	K16-798058	Nozzle body retainer	5
17	K16004-39	3/8" HB X 3/8" HB X 3/8" HB Tee	3
18	792424	3/8" HB valve	3
19	K16-797661	Bracket, ball valve	3
20	K16-797706	3/8" x 25 cm hose	1
21	K16-798695	3/8" x 36 cm hose	2
22	K16-798898	3/8" x 44 cm hose	2
23	K16-798697	3/8" x 10 cm hose	2
24	K16-798881	3/8" Clear braided pvc hose	1
25	K16-798897	3/8" x 4.2 cm hose	2
26	K16-797700	3/8" EPDM hose	1
27	K16-784436	3/8" hose clamp, crimp	18
28	K16-798799	Stepless Hose clamp, 16.2mm ID	2
29	K16000-2	3/8" hose clamp	5
30	K16-791168	5mm x 400mm tie	4
31	K16-82095	5/16" - 18 X 2.5" Bolt	2
32	K16001-14	5/16" x .5" Bolt	4
33	K16-82019	5/16" flange nut	4
34	K16-82020	5/16" nyloc nut	4
35	K16-82015	5/16"-18 x 3/4" Bolt	6
36	K16-82070	1/4"-20 X .5 Bolt	2
37	K16-82013	1/4"-20 flange nut	2
38	K16-82690	M4-0.7 x 6mm flat head screw	6
39	K16-798567	Pinch point decal	2
40	K16-799247	Boom arm weldment, left	1

Appendix A –Broadcast Spray Calibration Tables

Below are some guidelines to help you calibrate your tow behind broadcast sprayer. This is a very important step in operating the tow behind broadcast sprayer such that too much or too little chemical may be applied.

1. Using **Table 1,** find a table that corresponds with the chemical manufacturer's suggested application rate (litres per hectare, litres per 1000 sq. m.)
2. Find the application rate that is closest to the chemical manufacturer's recommendations.
3. The speed to drive your ATV is listed below the application rates.

TABLE 1

SPRAY HEIGHT	**PRESSURE (kPa)**	**LITRES PER HECTARE** – based on water at 51cm spacing				
		3.2 KPH	**4.8 KPH**	**6.4 KPH**	**8.0 KPH**	**9.7 KPH**
51cm	207	486	325	243	195	162
51cm	276	556	370	278	223	185
51cm	345	625	417	312	250	209

SPRAY HEIGHT	**PRESSURE (kPa)**	**LITRES PER 1000 SQ. M.** – based on water at 51cm spacing				
		3.2 KPH	**4.8 KPH**	**6.4 KPH**	**8.0 KPH**	**9.7 KPH**
51cm	207	48.6	32.5	24.3	19.5	16.2
51cm	276	55.6	37.0	27.8	22.3	18.5
51cm	345	62.5	41.7	31.2	25.0	20.9

*** Approximate flow from one nozzle**

4. Use **Table 2** to choose the throttle setting on your ATV.

Speed	**Time required in seconds to travel a distance of:**		
(KM/H)	**10 m.**	**50 m.**	**100 m.**
1	36	180	360
3	12	60	120
5	7	35	70
7	5	25	50
9	4	20	40
12	3	15	30
16	2	11	22

TABLE 2

5. The coverage area can be found by dividing tank size by the application rate.

Example: 155 litres divided by 209 litres/hectare = 0.74 hectare of coverage per tank.

Limited Warranty

Dear Valued Customer:

Use this product properly and enjoy the benefits from its high performance. By purchasing a Kincrome product, you show a desire for quality and durability. Like all mechanical equipment this unit requires a due amount of care. Treat this unit like the high quality piece of machinery it is. Neglect and improper handling may impair its performance. Please thoroughly read the instructions and understand the operation before using your product. Always contact Kincrome Customer Service at 1300 657 528 prior to having any service or warranty work performed, as some services performed by parties other than Kincrome approved service centers may void this warranty. This warranty is in lieu of any other warranty expressed or implied and Kincrome assumes no other responsibility or liability outside that expressed within this warranty.

Australian Limited Warranty

Warranty given by Kincrome Australia Pty Ltd of 3 Lakeview Drive, Caribbean Park, Scoresby, Victoria (Tel 1300 657 528). The applicable warranty period (24 months) commences on the date that the product is purchased. If this product has materials or workmanship defects (other than defects caused by abnormal or non warranted use) you can, at your cost, send the product to place of purchase, an authorised Kincrome service agent or one of Kincromes addresses for repair or replacement. Your rights under this warranty are in addition to any other rights you have under the Australian Consumer Law or other applicable laws. Our goods come with guarantees that cannot be excluded under the Australian Consumer Law. You are entitled to a replacement or refund for a major failure and compensation for any other reasonably foreseeable loss or damage. You are also entitled to have the goods repaired or replaced if the goods fail to be of acceptable quality and the failure does not amount to a major failure. For further details please visit www.kincrome.com.au or call us. Due to minor changes in design or manufacture, the product you purchase may sometimes differ from the one shown on the packaging. IMPORTANT! If the tool fails to operate correctly, call customer service at 1800 657 528 for advice on the best resolution for your situation. If a resolution cannot be achieved over the phone please take the tool and all related accessories to an authorised service centre or place of purchase showing proof of purchase for assistance.

KINCROME
PROFESSIONAL QUALITY TOOLS

www.kincrome.com.au