KP1701 Pump Explosion Diagram

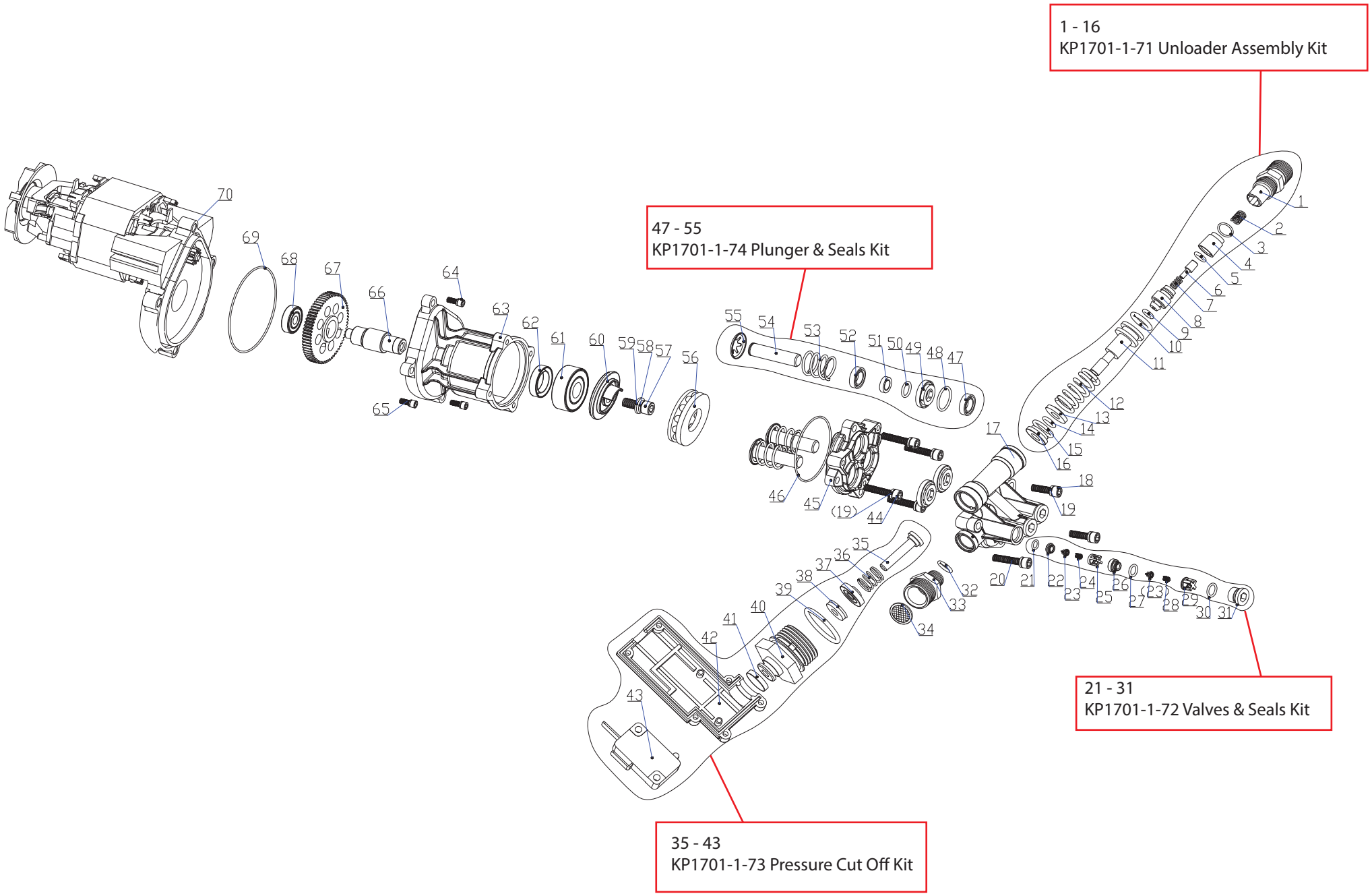

KP1701 Pump Assembly Breakdown

Drawing No.	Kincrome Part No	Kincrome Part Name	Breadown Description
1	KP1701-1-71	UNLOADER ASSEMBLY KIT	WATER OUTLET JOINT
2			SPRING 0.5×10×6.5×11.85
3			O-RING Ø 22×2.4
4			BLOCKING
5			O-RING Ø 5×1.8
6			VALVE CORE
7			VALVE CORE SPRING
8			JACKET
9			O-RING Ø 4.5×1.8
10			O-RING Ø 16×2.4
11			PISTON
12			PISTON SPRING
13			PISTON SEAT
14			O-RING Ø 5.6×1.8
15			O-RING Ø 12×1.8
16			VALVE SEAT
17	KP1701-1-17	PUMP HEAD HOUSING	
18	KP1701-1-18	HEX SCREW M6 X 25	
19	KP1701-1-19	M6 SPRING WASHER	
20	KP1701-1-20	HEX SCREW M6 X 35	
21	KP1701-1-72	VALVES & SEALS KIT (3)	O-RING Ø 6.5×1.5
22			INLET&OUTLET VALVE SEAT
23			INLET&OUTLET VALVE CORE
24			INLET&OUTLET VALVE SPRING 0.3×6.4×6.5×6.3
25			INLET&OUTLET VALVE
26			OUTLET VALVE SEAT
27			O-RING Ø 8.5×1.8
(23)			INLET&OUTLET VALVE CORE
28			OUTLET VALVE SPRING 0.3×6.4×6.5×6.3
29			OUTLET VALVE
30			O-RING Ø 13×1.9
31			INLET&OUTLET VALVE CAP
32	KP1701-1-32	WATER INLET O-RING	O-RING Ø 18×2.4
33	KP1701-1-33	WATER INLET ADAPTOR	
34	KP1701-1-34	INLET FILTER	
35	KP1701-1-73	PRESSURE CUTOFF KIT	PUSH ROD FOR PRESSURE SWITCH
36			PUSH ROD SPRING 1×11.2×5×15.9
37			GASKET FOR CONNECTING NUT
38			Y-RING Y 4×11×2.5
39			O-RING Ø 22×1.9
40			CONNECTING NUT
41			SWITCHING WATERPROOF COVER
42			SWITCHING AROUND SHELL
43			MICRO SWITCH

KP1701 Pump Assembly Breakdown

Drawing No.	Kincrome Part No	Kincrome Part Name	Breadown Description
44	KP1701-1-44	HEX SCREW M6 X 25	
45	KP1701-1-45	PUMP HOUSING	
46	KP1701-1-46	PUMP MAIN O-RING	O-RING Ø 58×2.65
47	KP1701-1-74	PLUNGER & SEALS KIT (3)	Y-RING Y 12×18×4
48			O-RING Ø 22×1.9
49			MIDDLE SETS
50			O-RING Ø 16×1.9
51			IN THE INTERVAL SETS
52			SKELETON SEAL 12×20×4
53			PLUNGER SPRING
54			PLUNGER
55			PLUNGER CLIP
56	KP1701-1-56	D-SHAFT THRUST BEARING	THRUST BALL BEARINGS 51107B
57	KP1701-1-57	HEX SCREW M8 X 20	
58	KP1701-1-58	M8 SPRING WASHER	
59	KP1701-1-59	M8 FLAT WASHER	
60	KP1701-1-60	DRIVE BEARING SEAT	
61	KP1701-1-61	DRIVE SHAFT BEARING	BEARINGS 6302
62	KP1701-1-62	DRIVE SHAFT SEAL	SEAL 20×30×9
63	KP1701-1-63	PUMP ASSEMBLY HOUSING	
64	KP1701-1-64	HEX SCREW M6 X 20	
65	KP1701-1-65	HEX SCREW M6 X 25	
66	KP1701-1-66	MOTOR DRIVE SHAFT	
67	KP1701-1-67	DRIVE GEAR	DRIVE GEAR 50
68	KP1701-1-68	MOTOR REAR BEARING	MOTOR REAR BEARING 629
69	KP1701-1-69	MOTOR O-RING	O-RING Ø 65×1.8
70	KP1701-1-70	MOTOR ASSEMBLY	

KP1701-2 Housing Assembly & Accessories Breakdown

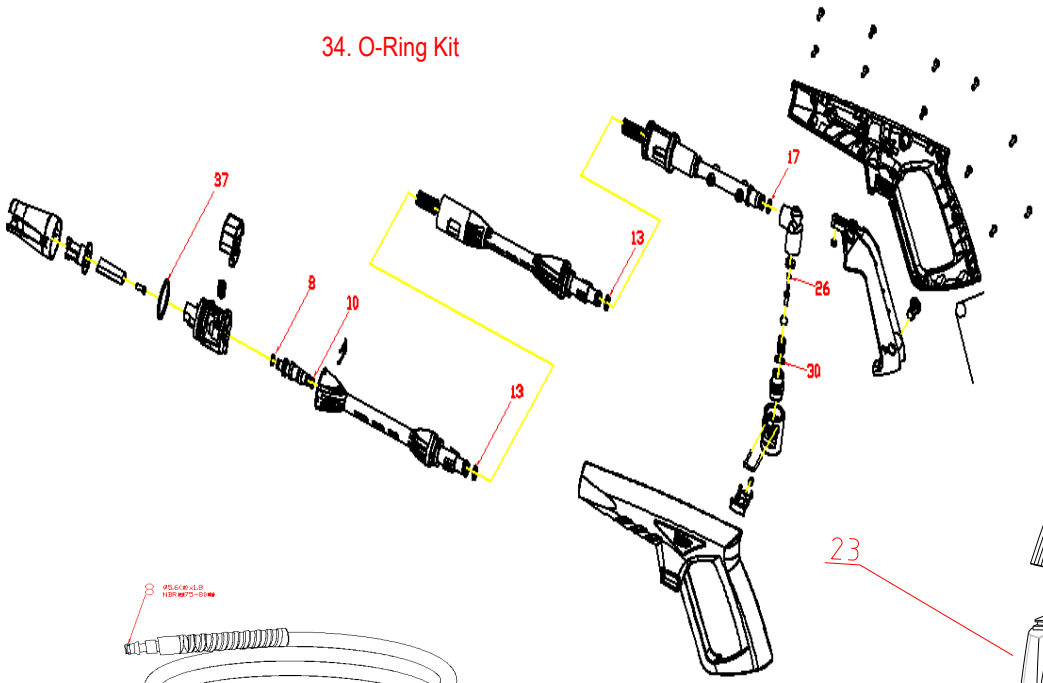

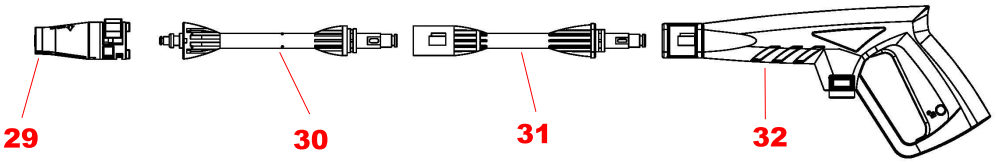

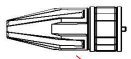

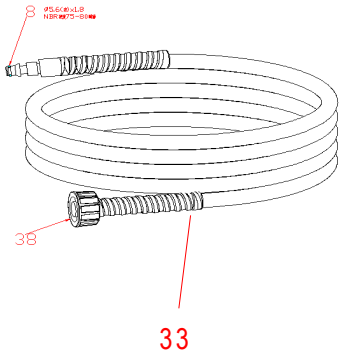



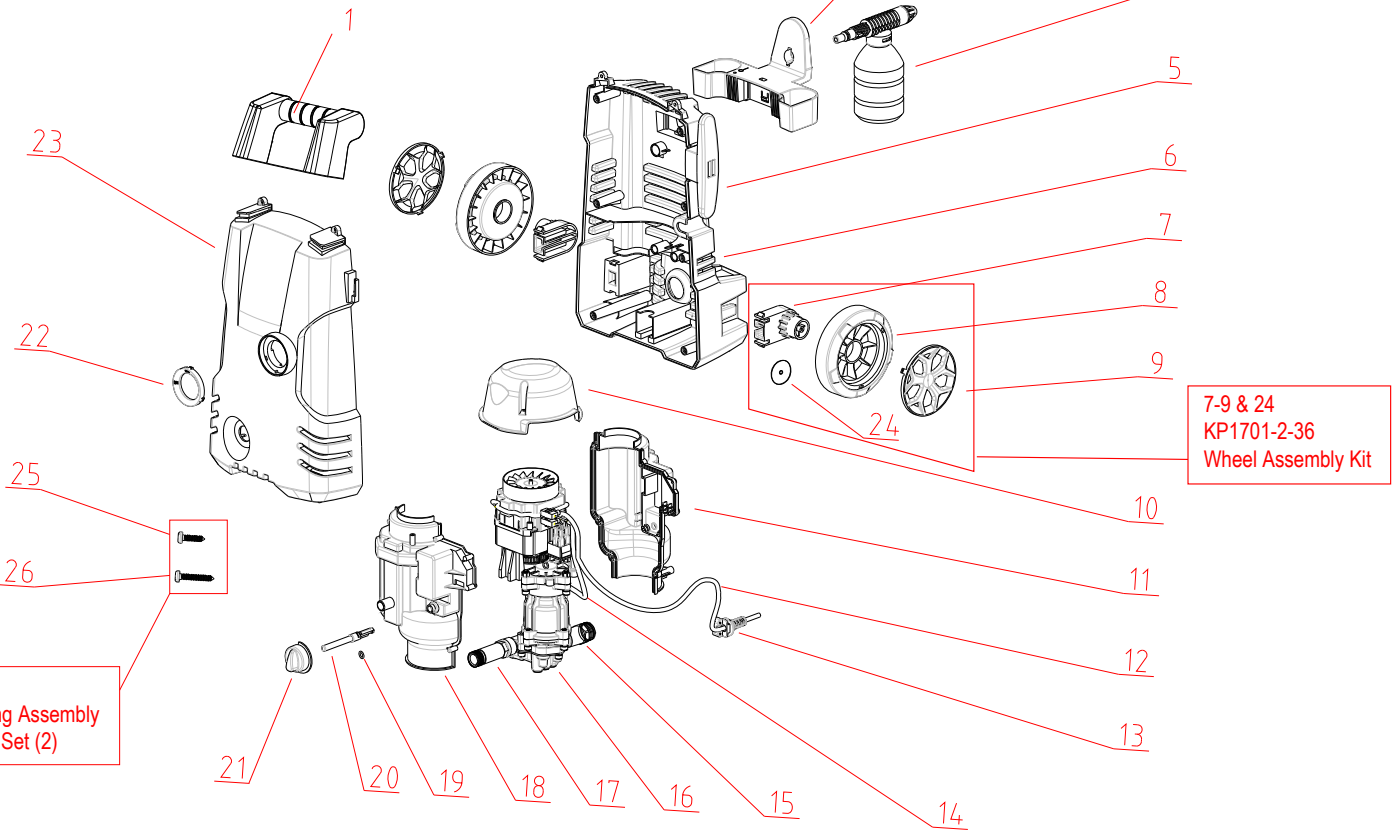

KP1701 Housing Assembly And Accessories Breakdown

Drawing No.	Kincrome Part No	Kincrome Part Name	Breadown Description
1	KP1701-2-1	CARRY HANDLE	
2	KP1701-2-2	-	-
3	KP1701-2-3	HIGH PRESSURE HOSE HOLDER	
4	KP1701-2-4	DETERGENT DISPENSER	
5	KP1701-2-5	POWER CABLE HOLDER	
6	KP1701-2-6	REAR HOUSING	
7	KP1701-2-36	WHEEL ASSEMBLY (1)	WHEEL AXLE
8			WHEEL
9			WHEEL CAP
24			WHEEL GASKET
10	KP1701-2-10	TOP MOTOR CASING	
11	KP1701-2-11	RH MOTOR CASING	
12	KP1701-2-12	POWER CABLE	
13	KP1701-2-13	CORD RESTRAINT	
14	KP1701-2-14	PRESSURE SWITCH LINE	
15	KP1701-2-15	WATER INLET CONNECTOR	
16	KP1701-2-16	MOTOR & PUMP ASSEMBLY	
17	KP1701-2-17	HIGH PRESSURE OUTPUT CONNECTOR	
18	KP1701-2-18	LH MOTOR CASING	
19	KP1701-2-19	SWITCH SHAFT O-RING	O-RING Ø
20	KP1701-2-20	ON / OFF SWITCH SHAFT	
21	KP1701-2-21	ON / OFF SWITCH KNOB	
22	KP1701-2-22	ON / OFF SWITCH PLATE	
23	KP1701-2-23	FRONT HOUSING	
25	KP1701-2-37	HOUSING ASSEMBLY SCREW SET (2)	CROSSED RECESSEDPAN HEAD TAPPING SCREW
26			CROSSED RECESSEDPAN HEAD TAPPING SCREW
28	KP1701-2-28	TURBO NOZZLE	
29	KP1701-2-29	ADJUSTABLE NOZZLE	
30	KP1701-2-30	LANCE EXTENSION	
31	KP1701-2-31	LANCE	
32	KP1701-2-32	QUICK CONNECT GUN	
33	KP1701-2-33	HIGH PRESSURE HOSE 5M	
34	KP1701-2-34	O-RING KIT (GUN, LANCE, HOSE)	O-RING Ø 5.6*1.8; O-RING Ø 6.8*1.9; O-RING Ø 8.7*2.65,2pcs; O-RING Ø 9.8*1.9; O-RING Ø 6*1.9 ; O-RING Ø 14*1.9; O-RING Ø 32*2; O-RING Ø 5.6*1.8
35	KP1701-2-35	ON / OFF SWITCH	