KINCROME CONTOUR

Tool Trolley 1053mm (42") - 9 Drawer

Operation Manual

K74229, K74229B

IMPORTANT: THIS OPERATING MANUAL CONTAINS IMPORTANT SAFETY INFORMATION, READ CAREFULLY & UNDERSTAND ALL INFORMATION BEFORE OPERATING. SAVE THIS MANUAL FOR FUTURE USE



Do not open more than one drawer at a time. | Do not step on drawers. | Do not let children near the Toolbox. | Do not separate Chest from Trolley. | Do not exceed Drawer Load Limit | Not suitable for mounting in Vehicles | Set the brake on the locking castors unless your are moving the Toolbox. | Lock drawers and lid before moving the Toolbox.

Specifications

Drawer Load Capacity	40kg
Net Weight	98kg
Material	Heavy Gauge Steel
Measurements	L 1053 x W 470 x H 919mm

Parts List

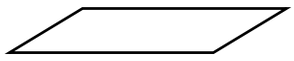

9 X EVA MATS

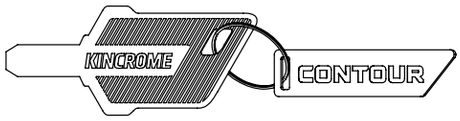

2 X KEY

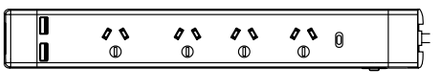

1 X MAGNETIC POWER BOARD

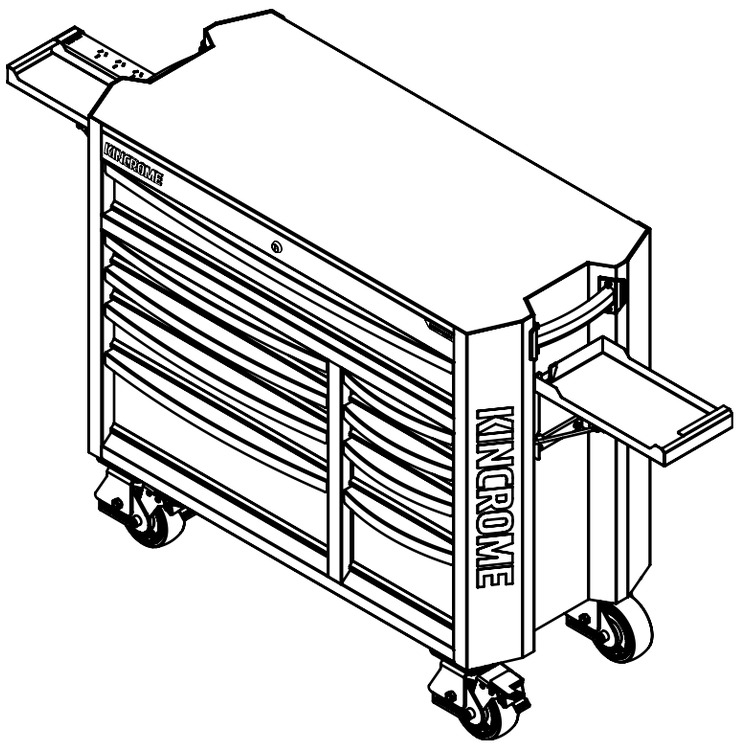

Maintenance

> Periodically tighten all hardware
> Periodically lubricate castors
> Lubricate all slides twice a year
> Lubricate the lock with graphite annually
> Use a damp Microfibre cloth to clean all surfaces

KINCROME CONTOUR

Tool Trolley 1053mm (42") - 9 Drawer

Operation Manual

K74229, K74229B

How to Remove & Reinsert Drawers

REMOVING THE DRAWERS

- Fully extend the empty drawer.
- Push up the right release lever while pushing down the left release lever.
- Pull the drawer outward until it is released from the drawer slide.

RE-INSERTING THE DRAWERS

- Extend the drawer slides.
- Insert the brackets on each side of the drawer into the slots on the slides, being careful that they are properly positioned.
- Once properly inserted, completely close the drawer to set the slides in their proper positions.

Note: If drawer does not slide in smoothly Do Not force. Remove and re install drawer.

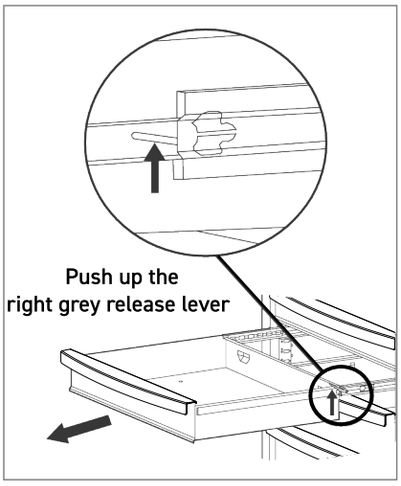

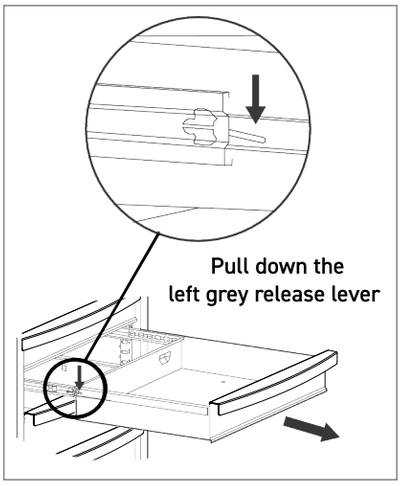

Spare Parts - Blue - K74229

Ref	Part Number	QTY	Description
1	K79955	9	TROLLEY ADRS BB SLIDE 45MM (PAIR)
2	K79957	1	LOCK & KEY TROLLEY BLUE
3	K79953	1	KEY ONLY CHEST/HUTCH/TROLLEY BLUE
4	K79963	2	SWIVEL SUSPENSION CASTOR BLUE X1
5	K79964	2	SWIVEL SUSPENSION CASTOR LOCK BLUE X1
6	K79970	4	EVA STD DRAWER LINER 5MM X1
7	K79971	4	EVA 42" SMALL DRAWER LINER 5MM X1
8	K79972	1	TROLLEY 42" TOP DRAW EVA 5MM X1
9	K79977	1	MAGNETIC POWERBOARD BLUE
10	K79979	2	HANDLE CHEST/TROLLEY/HUTCH BLUE X1

Spare Parts - Black - K74229B

Ref	Part Number	QTY	Description
1	K79955	9	TROLLEY ADRS BB SLIDE 45MM (PAIR)
2	K79958	1	LOCK & KEY TROLLEY BLACK
3	K79954	1	KEY ONLY CHEST/HUTCH/TROLLEY BLACK
4	K79965	2	SWIVEL SUSPENSION CASTOR BLACK X1
5	K79966	2	SWIVEL SUSPENSION CASTOR LOCK BLACK X1
6	K79970	4	EVA STD DRAWER LINER 5MM X1
7	K79971	4	EVA 42" SMALL DRAWER LINER 5MM X1
8	K79972	1	TROLLEY 42" TOP DRAW EVA 5MM X1
9	K79978	1	MAGNETIC POWERBOARD BLACK
10	K79980	2	HANDLE CHEST/TROLLEY/HUTCH BLACK X1

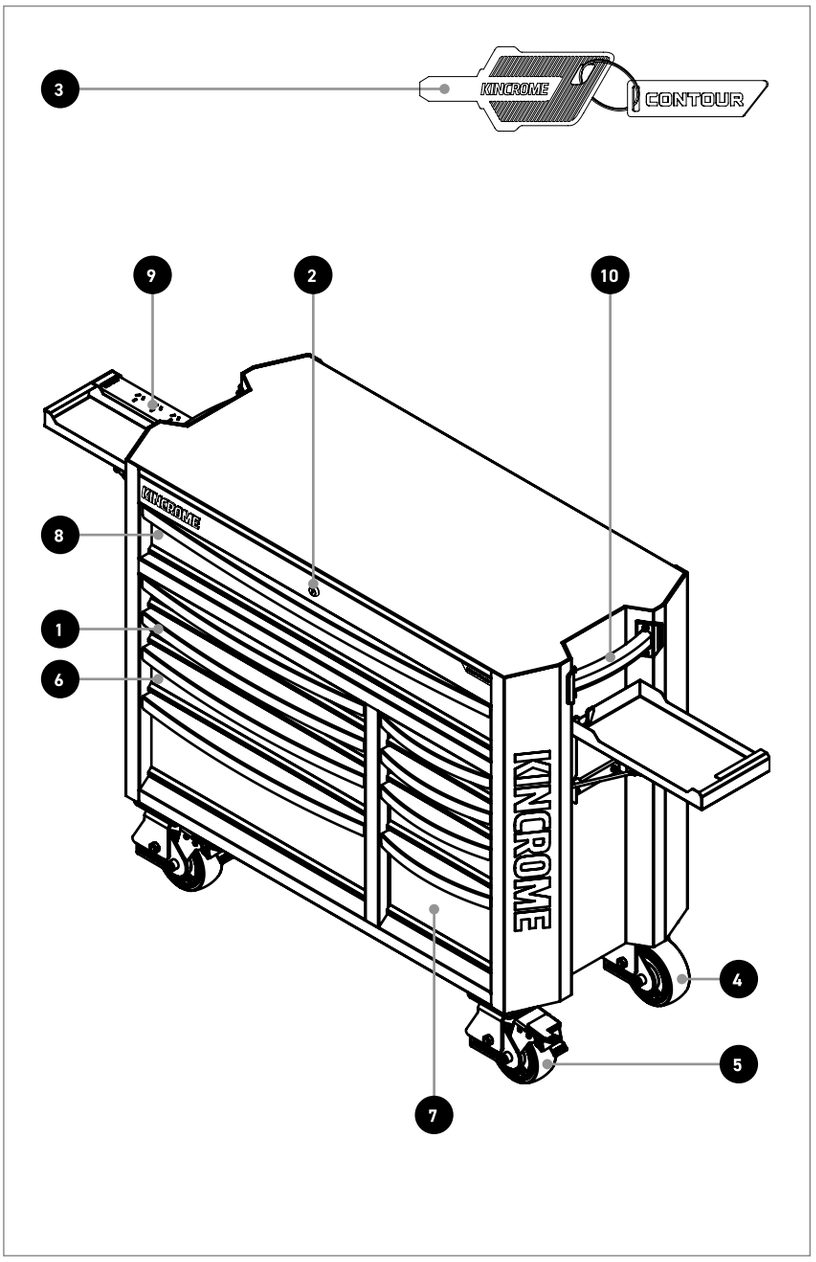

General Safety Warnings

K74229, K74229B

For the safety of yourself and others, follow all instructions and take notice of all the warnings. When adhered to, these safety precautions can reduce the risk of fire, electric shock and injury.
This product complies with Australian Safety standard AS/NZS 3105, 61558.2.16 and AS/NZS 3100:2017 to ensure the safety of the product.
The RCM is a visible indication of a product's compliance with all applicable ACMA regulatory arrangements, including all technical and record-keeping requirements.

IMPORTANT

- Damage: If the powerboard or cord is damaged, contact the After Sales Support line for advice. Do not attempt to open the board or replace the cord. The cord must be replaced by appropriately qualified personnel.
- Repair: If the powerboard requires repair, contact the After Sales Support line; never disassemble or modify the powerboard or attempt to service it yourself.
- Run the power supply cord in such a way that there will be no risk of anyone pulling it inadvertently or tripping over it.
- The powerboard is not intended for use by persons (including children) with reduced physical, sensory or mental capabilities, or lack of experience and knowledge, unless they have been given supervision or instruction by a person responsible for their safety.
- Young children should be supervised to ensure they do not play with the powerboard. Close supervision is always necessary when any appliance is used by or near children.
- The surge powerboard is designed for indoor use in dry places only.
- Do not exceed a maximum loading of 2400 watts.
- For safety reasons, always use earth connections.
- Only use the powerboard with the power supply cord fully unwound.
- Before installing the powerboard, make sure to place it away from: heat sources, radiators or other products that produce heat; areas with high temperatures, high humidity or direct sunlight; excess dirt and dust; open windows and any place where water may get to the unit.
- Do not immerse the cord, plug or the surge powerboard in water or other liquid, or expose the electrical connections to water or other liquid.
- Unpack the powerboard and keep the original packaging carton and materials in a safe place. It will help prevent any damage if the
- powerboard needs to be transported in the future, and you can use it to store the powerboard when it is not in use.
- The powerboard should always be repacked in its original packaging whenever transporting to prevent any possible damage to the product.
- When not in use: Disconnect from the power source and store in a cool, dry and well ventilated location out of direct sunlight, and not subject to humidity.
- Warning: Discard this powerboard if the supply cord is damaged.
- Warning: The socket outlet should be located near the equipment and should be easily accessible.

Responsible disposal of the product

At the end of its working life, do not throw this product out with your household rubbish. An environmentally friendly method of disposal will ensure that valuable raw materials can be recycled.
Contact your local authority for your nearest recycling centre. Electrical and electronic items contain materials and substances which, if handled or disposed of incorrectly, could potentially be hazardous to the environment and human health.

Responsible disposal of the packaging

The packaging of the product has been selected from environmentally friendly materials and can usually be recycled. Please ensure these are disposed of correctly. Plastic wrapping can be a suffocation hazard for babies and young children, please ensure all packaging materials are out of reach and are safely disposed of. Please ensure they are offered for recycling rather than throwing these materials away.

Cleaning the product

Only use a soft, dry cloth for cleaning the product; do not use a damp cloth. Never clean with industrial strength polish, wax, benzene, paint thinner, air freshener, lubricant, detergent, or other chemicals.
Wipe off any moisture, dirt or dust on the sockets and plug pins with a clean, dry cloth.

Specifications

Part No.	**TH-AUH4U**
Input	AC 230-240V, 50Hz, 10A
Total Loading	Max 10A 2400W
Surge Protection	190J
USB Output	DC 5V, 3.1A Max.
Power Cable	1.0m

1. Power Cord
2. Overload Circuit Breaker (Resettable)
3. Surge Protected LED Indicator
4. AC Sockets (x 4 Max 10A 2400W)
5. USB Charging Ports (x2 Max 3.1A)

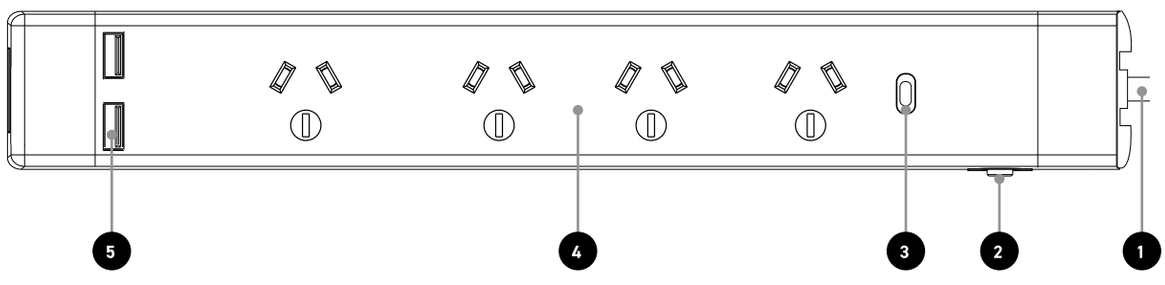

KINCROME CONTOUR

Tool Trolley 1053mm (42") - 9 Drawer

K74229, K74229B

OFFICE CONTACT DETAILS

Phone: 1300 657 528 Email: enquiries@kincrome.com.au Website: www.kincrome.com.au

WARRANTY

3 YEAR WARRANTY

Our goods and services come with guarantees that cannot be excluded under the Australian Consumer Law. For major failures with the service, you are entitled: -to cancel your service contract with us; and -to a refund for the unused portion, or to compensation for its reduced value. You are also entitled to choose a refund or replacement for major failures with goods. If a failure with the goods or a service does not amount to a major failure, you are entitled to have the failure rectified in a reasonable time. If this is not done you are entitled to a refund for the goods and to cancel the contract for the service and obtain a refund of any unused portion. You are also entitled to be compensated for any other reasonably foreseeable loss or damage from a failure in the goods or service'. Kincrome Australia Pty Ltd of 3 Lakeview Drive, Caribbean Park, Scoresby, Victoria (Tel 1300 657 528) also provides the Kincrome Limited Lifetime Guarantee, 5 Year Warranty, 5 Year (3+2) warranty, 3 Year Warranty, 2 Year Warranty and 12-Month Warranty (Kincrome Express Warranties) in respect of some of its products. If a product is covered by a Kincrome Express Warranty and it has materials or workmanship defects (other than defects caused by abnormal or non warranted use) which are covered under the terms of the relevant Kincrome Express Warranty, you can, at your cost, send the product to the above address for repair or replacement. Your rights under a Kincrome Express Warranty are in addition to any other rights you have under the Australian Consumer Law or other applicable laws. For further details and terms please check our product guide, visit www.kincrome.com.au or call us. Every effort is made to ensure advertised stock is available, but due to factors beyond the control of Kincrome Australia Pty. Ltd, not all products advertised in this catalogue may be available at all stores. Kincrome Australia Pty. Ltd. reserves the right to correct printing errors. All sizes shown are approximate only. Accessories shown do not come with the product unless otherwise specified. Due to printing process, colours in this catalogue may vary slightly to actual item. E. & O. E.© Copyright 2022. Reproduction in whole or in part is prohibited without written approval.