KP1702 Pump Explosion Diagram

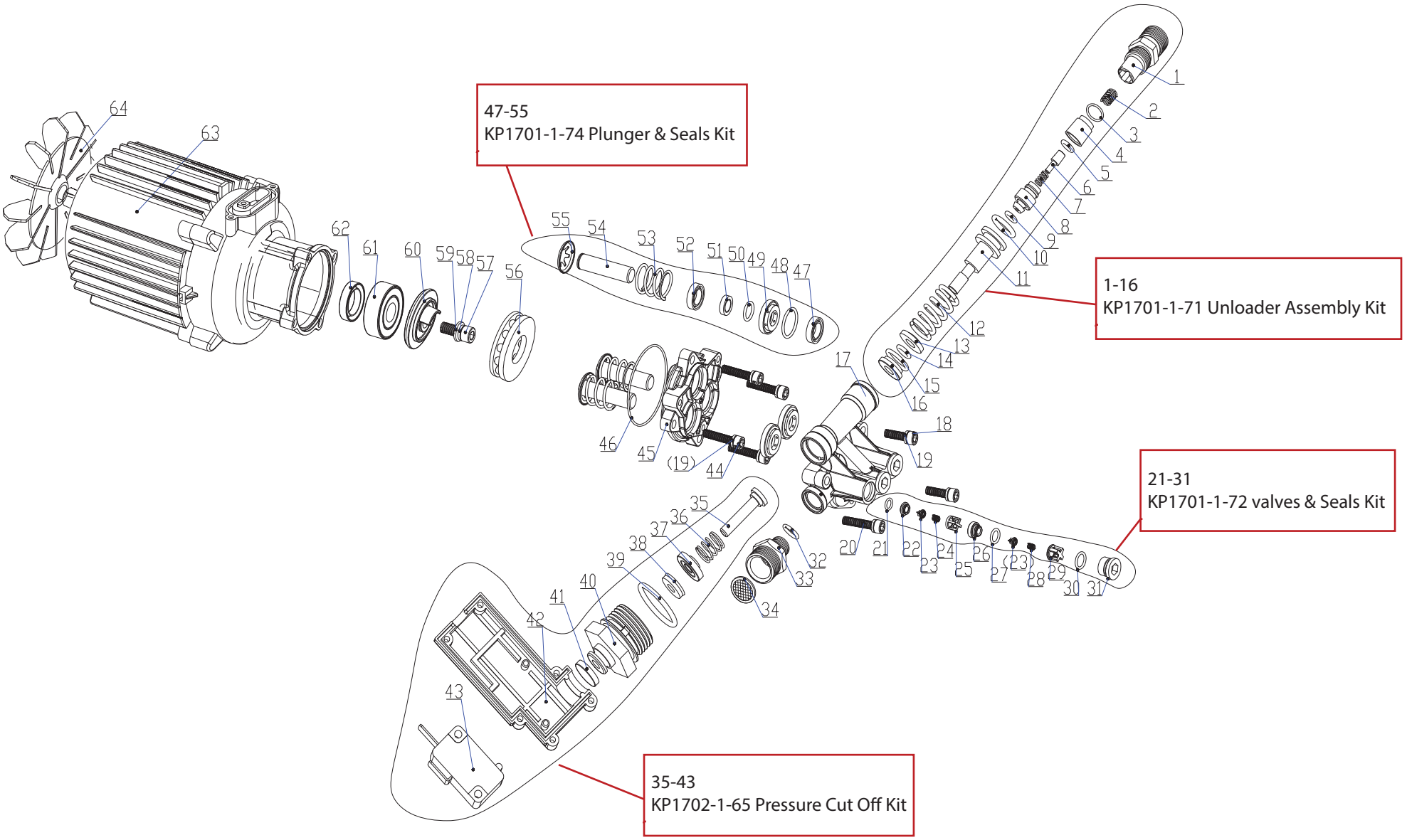

KP1702 Pump Assembly Breakdown

Drawing No.	Kincrome Part No	Kincrome Part Name	Breadown Description
1	KP1701-1-71	UNLOADER ASSEMBLY KIT	WATER OUTLET JOINT
2			SPRING 0.5X10X6.5X11.85
3			O-RING Ø 22X2.4MM
4			BLOCKING
5			O-RING Ø 5X1.8MM
6			VALVE CORE
7			VALVE CORE SPRING
8			JACKET
9			O-RING Ø 4.5X1.8MM
10			O-RING Ø 16X2.4MM
11			PISTON
12			PISTON SPRING
13			PISTON SEAT
14			O-RING,Ø 5.6X1.8 MM
15			O-RING, Ø 12X1.8 MM
16			VALVE SEAT
17	KP1701-1-17	PUMP HEAD HOUSING	
18	KP1701-1-18	HEX SCREW M6 X 25	SCREW INTHERNAL HEXAGONAL M6X25
19	KP1701-1-19	M6 SPRING WASHER	SPRING WASHERΦ6
20	KP1701-1-20	HEX SCREW M6 X 35	SCREW INTHERNAL HEXAGONAL M6X35
21	KP1701-1-72	VALVES & SEALS KIT (1)	O-RING, Ø 6.5X1.5 MM
22			INLET&OUTLET VALVE SEAT
23			INLET&OUTLET VALVE CORE
24			INLET&OUTLET VALVE SPRING 0.3×6.4×6.5×6.3
25			INLET&OUTLET VALVE
26			OUTLET VALVE SEAT
27			O-RING, Ø 8.5×1.8
（23）			INLET&OUTLET VALVE CORE
28			INLET&OUTLET VALVE SPRING 0.3×6.4×6.5×6.3
29			OUTLET VALVE
30			O-RING, Ø 13×1.9
31			INLET&OUTLET VALVE CAP

KP1702 Pump Assembly Breakdown

Drawing No.	Kincrome Part No	Kincrome Part Name	Breadown Description
32	KP1701-1-32	WATER INLET O-RING	O-RING, Ø 18×2.4
33	KP1701-1-33	WATER INLET ADAPTOR	
34	KP1701-1-34	INLET FILTER	
35	KP1702-1-65	PRESSURE CUTOFF KIT	PUSH ROD FOR PRESSURE SWITCH
36			SPRING, Φ1XΦ11.2X5X15.9
37			Gasket for connecting nut
38			Y-RING Y 4×11×2.5
39			O-RING Ø 22×1.9
40			Connecting nut
41			Switching waterproof cover
42			Switching around shell
43			MICRO SWITCH
44	KP1701-1-44	HEX SCREW M6 X 25	SCREW INTHERNAL HEXAGONAL M6X25
45	KP1701-1-45	PUMP HOUSING	
46	KP1701-1-46	PUMP MAIN O-RING	O-RING, Ø 58×2.65
47	KP1701-1-74	PLUNGER & SEALS KIT (3)	Y-RING , Y 12×18×4
48			O-RING, Ø 22×1.9
49			INTERSPACE RINGER
50			O-RING Ø 16X1.9
51			In the interval sets
52			Skeleton SEAL 12×20×4
53			Plunger spring
54			Plunger
55			Plunger clip
56	KP1701-1-56	D-SHAFT THRUST BEARING	Thrust ball bearings 51107B
57	KP1702-1-57	HEX SCREW M8 X 20	SCREW INTERNAL HEXAGONAL M8×20
58	KP1702-1-58	M8 SPRING WASHER	SPRING WASHER M8
59	KP1702-1-59	M8 FLAT WASHER	FLAT WASHER M8
60	KP1702-1-60	DRIVE BEARING SEAT	
61	KP1702-1-61	DRIVE SHAFT BEARING	Bearings 6302
62	KP1702-1-62	DRIVE SHAFT SEAL	SEAL 20×30×9
63	KP1702-1-63	MOTOR ASSEMBLY	
64	KP1702-1-64	MOTOR BLADE	

KP1702-2 Housing Assembly & Accessories Breakdown

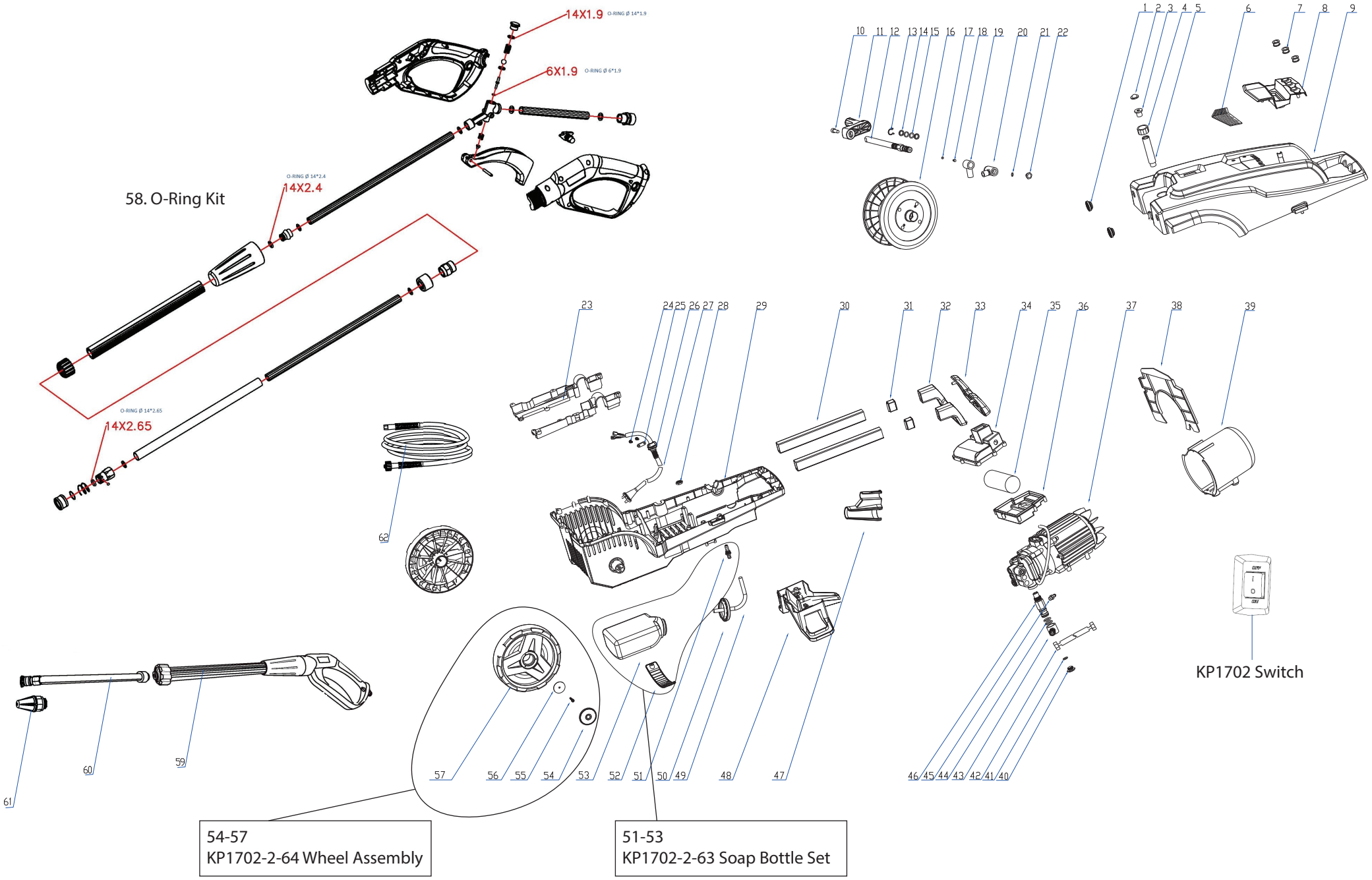

KP1702 Housing Assembly And Accessories Breakdown

Drawing No.	Kincrome Part No	Kincrome Part Name	Breadown Description
1	KP1702-2-1	RUBBER FEET	
2	KP1702-2-2	WATER INLET FILTER	
3	KP1702-2-3	WATER INLET CONNECTOR	
4	KP1702-2-4	WATER INLET CAP	
5	KP1702-2-5	WATER INLET CONNECTOR	
6	KP1702-2-6	COVER PANEL	
7	KP1702-2-7	QUICK CONNECT NOZZLE	
8	KP1702-2-8	NOZZLE STORAGE	
9	KP1702-2-9	FRONT HOUSING	
10	KP1702-2-10	HOSE HANDLE NUT	
11	KP1702-2-11	HOSE HANDLE	
12	KP1702-2-12	HOSE REEL SHAFT	
13	KP1702-2-13	HOSE REEL CIRCLIP	
14	KP1702-2-14	HOSE REEL WASHER 16X2.4	SQUARE RING 16X2.4
15	KP1702-2-15	HOSE REEL O-RING Ø 16X2.4	O-RING Ø 16X2.4
16	KP1702-2-16	HOSE REEL 5M	
17	KP1702-2-17	HOSE REEL O-RING Ø 6X1.9	O-RING Ø 6X1.9
18	KP1702-2-18	HOSE REEL CONNECTOR	
19	KP1702-2-19	HOSE REEL INTERNAL CONNECTOR	
20	KP1702-2-20	HOSE REEL EXTERNAL CONNECTOR	
21	KP1702-2-21	HOSE REEL O-RING Ø 9X1.9	O-RING Ø 9X1.9
22	KP1702-2-22	HOSE REEL SCREW	
23	KP1702-2-23	HOSE REEL FASTENING MOUNTS	
24	KP1702-2-24	CORD TAPPING SCREW ST4X16	CROSSED RECESSEDPAN HEAD TAPPING SCREW ST4X16
25	KP1702-2-25	CORD RETAINING CLIP	
26	KP1702-2-26	CORD RESTRAING	
27	KP1702-2-27	POWER CABLE	
28	KP1702-2-28	HEX SCREW M12 X 1.25	SCREW INTERNAL HEXAGONAL M12×1.25
29	KP1702-2-29	REAR HOUSING	
30	KP1702-2-30	EXTENSION HANDLE TUBES	
31	KP1702-2-31	ALUMINUM TUBE ADAPTOR	
32	KP1702-2-32	LOWER HANDLE	

KP1702 Housing Assembly And Accessories Breakdown

Drawing No.	Kincrome Part No	Kincrome Part Name	Breadown Description
33	KP1702-2-33	UPPER HANDLE	
34	KP1702-2-34	JUNCTION BOX COVER	
35	KP1702-2-35	CAPACITOR	
36	KP1702-2-36	JUNCTION BOX LOWER COVER	
37	KP1702-2-37	MOTOR & PUMP ASSEMBLY	
38	KP1702-2-38	INSULATION COVER	
39	KP1702-2-39	MOTOR COVER	
40	KP1702-2-40	OUTLET SCREW COVER	
41	KP1702-2-41	OUTLET O-RING Ø 15X2.4	O-RING Ø 15X2.4
42	KP1702-2-42	REEL CONNECTION HOSE	
43	KP1702-2-43	WATER OUTLET CONNECTOR	
44	KP1702-2-44	OUTLET O-RING Ø 21X1.9	O-RING Ø 21X1.9
45	KP1702-2-45	DETERGENT INLET CONNECTOR	
46	KP1702-2-46	OUTLET CONNECTOR	
47	KP1702-2-47	QUICK CONNECT GUN HOLDER	
48	KP1702-2-48	CABLE HOLDER	
49	KP1702-2-49	SOAP BOTTLE PIPE	
50	KP1702-2-50	SOAP BOTTLE COVER	
51	KP1702-2-63	SOAP BOTTLE SET	PIPETTE CONNECRTING JOINT
52			BOTTLE PRESSURE PLATE
53			BOTTLE
54	KP1702-2-64	WHEEL ASSEMBLY (1)	WHEEL COVER
55			CROSSED RECESSEDPAN HEAD TAPPING SCREW ST4X25
56			WHEEL GASKET
57			WHEEL
58	KP1702-2-58	O-RING KIT (GUN, LANCE, HOSE)	Gun and lance: O-ring 14*2.4,3pcs; O-ring 14*1.9O-ring 6*1.9；Hose reel: O-ring 6.5*1.9；O-ring 9*1.9；O-ring 16*2.4；O-ring 10.5*1.9
59	KP1702-2-59	QUICK CONNECT GUN	
60	KP1702-2-60	LANCE	
61	KP1702-2-61	TURBO NOZZLE	
62	KP1702-2-62	HIGH PRESSURE HOSE REEL 5M	