TOOL TROLLEY

6 DRAWER

K7536

Operation Manual

⚠ *IMPORTANT:*

THIS OPERATING MANUAL CONTAINS IMPORTANT SAFETY INFORMATION. READ CAREFULLY AND UNDERSTAND ALL INFORMATION BEFORE OPERATING TOOL TROLLEY.
SAVE THIS MANUAL FOR FUTURE USE

Caution: Take Safety Precautions When Using Your Toolbox

Do not open more than one drawer at a time. | Do not step on drawers. | Do not let children near the Toolbox. | Do not separate Chest from Trolley. | Do not exceed Drawer Load Limit | Not suitable for mounting in Vehicles | Lock drawers and lid before moving the Toolbox.

Parts List

TOOL TROLLEY SPECIFICATIONS

Overall	Width	Depth	Height
(with castors)	745mm	475mm	950mm
(without castors)	745mm	475mm	825mm
Drawers (Shallow)	545mm	397mm	50mm
Drawers (Deep)	545mm	397mm	92mm
Side Tray	175mm	300mm	12mm
Castor Size:	125mm x 50mm (5" x 2") x 2 Locking		
Weight	60Kg		

Assembly Instructions

Keys x 2

Trolley Handle x 1

8 x Hex Bolts for Push Handle

Power Handle x 1

Washers x 16

Non-Locking Swivel Castors (2)

Locking Swivel Castors (2)

13mm x 16 Bolts (16) for Castors

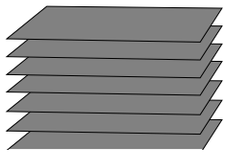
6 x EVA Liners

Spring Washers x 16

TOOLS & ASSISTANCE NEEDED

2 People Lift

Castor

13mm Spanner

Handle

5mm Hex Key

K7536 Manual.indd 1 9/05/2018 12:51 PM

TOOL TROLLEY

6 DRAWER

K7536

Assembly Instructions

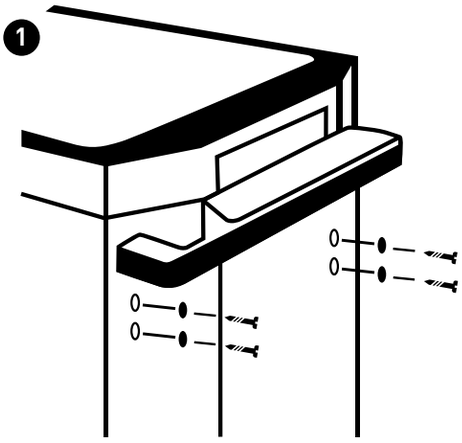

1 Handle Installing

- Position the trolley side handle behind the holes on the trolley.
- Attach with (4) bolts, and tighten with a 5mm Hex Key.

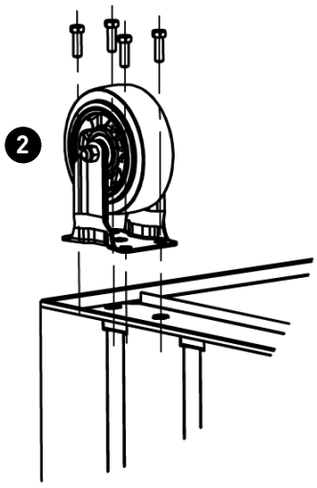

2 Castor Installing (If applicable)

- Be sure the drawers are locked and lay the trolley on its side.
- Secure castors to the unit using the 13mm bolts provided.
- Tighten with a 13mm Spanner.
- Repeat this process for the castors on the opposite of the trolley.
- Return the trolley to its upright position.

Caution: Do not over tighten the bolts.
Caution: Both locking castors must be fitted to front of trolley.

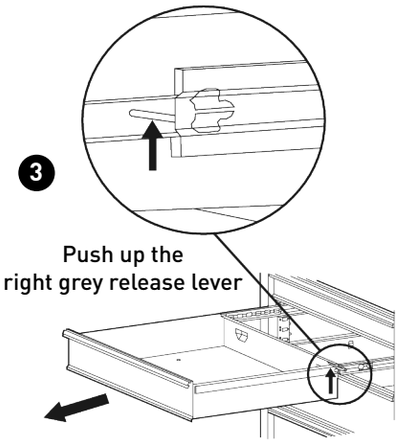

3 Removing the Drawers

- Fully extend the empty drawer.
- Push up the right grey release lever while pushing down the left grey release lever.
- Pull the drawer outward until it is released from the drawer slide.

4 Re-Inserting The Drawers

- Extend the drawer slides.
- Insert the brackets on each side of the drawer into the slots on the slides, being careful that they are properly positioned.
- Once properly inserted, completely close the drawer to set the slides in their proper positions.

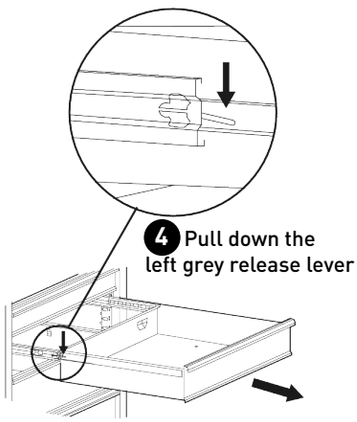

MAINTENANCE

- Periodically tighten all hardware
- Periodically lubricate castors
- Lubricate the slides twice a year
- Lubricate the lock with graphite annually
- Use a damp Microfibre cloth to clean all surfaces

K7536 Manual.indd 2 9/05/2018 12:51 PM

TOOL TROLLEY

6 DRAWER

K7536

Replacement Parts

REPLACEMENT PARTS

ITEM	PART NO.	DESCRIPTION	QUANTITY
1	K7778	Lock & Key	1
2	K7779	Key Only (Specify Number) X 1	1
3	K7759-5	Trolley Handle	1
4	K7741	Power Handle	1
5	K7747-16	Ball Bearing Slide (Pair)	6

ITEM	PART NO.	DESCRIPTION	QUANTITY
6	K7536-6	Eva Mat Pack Piece (6)	6
7	K7542-1	Castor Swivel X 1	2
8	K7542-2	Castor Swivel X 1 (Brake)	2
9	K7759-17	Castor Bolt Pack	1

KINCROME TOOLS + EQUIPMENT™

National Head Office
National Distribution and Showroom
3 Lakeview Dve, Caribbean Business Park
Scoresby Victoria 3179 Australia
ABN 41 007 185 006

Administration
T +61 3 9730 7100 F + 61 3 9730 7199
E enquiries@kincrome.com.au
W kincrome.com.au

Customer Service Centre
T 1300 657 528 F 1300 556 005

Made to Kincrome Tools & Equipment Pty Ltd Global specifications and quality standards in China
Kincrome UK Ltd PO Box 646 EASTLEIGH SO50 0NA

Australia & Global	UK & EU
www.kincrome.com.au	www.kincrome.co.uk
enquiries@kincrome.com.au	enquiries@kincrome.co.uk