TOOL TROLLEY 5 DRAWER
Part No. K7625

OPERATION MANUAL

⚠ IMPORTANT:

THIS OPERATING MANUAL CONTAINS IMPORTANT SAFETY INFORMATION. READ CAREFULLY AND UNDERSTAND ALL INFORMATION BEFORE OPERATING TOOL. SAVE THIS MANUAL FOR FUTURE USE.

PARTS LIST

4 x Hex 5mm Bolts for Trolley Handle

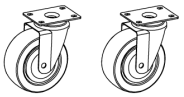

Non-Locking Castors (2)

13mm x 16 Bolts (16) for Castors (with Washers)

Locking Castors (2)

Trolley Handle x 1

Keys x 2

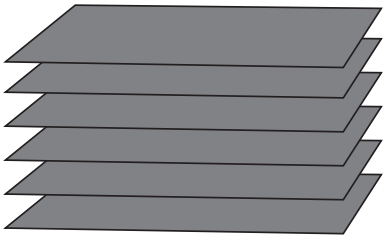

6 x Liners

TOOLS & ASSISTANCE NEEDED

2 People

13mm Spanner

5mm Hex Key

TOOL TROLLEY 5 DRAWER
Part No. K7625

ASSEMBLY INSTRUCTIONS

Step 1: Assembly Preparation
Remove all contents from box. Reference the parts list to make sure you have all the parts.

⚠ NOTE
Place a cover on the floor to prevent any damage to surface of the Trolley.

Castors are prefitted on large trolleys.

Step 2: Attaching Castors
Using two people, tip the trolley so it is laying drawer side up. Align holes in locking and non-locking Castors with matching holes in the bottom tray as shown in figure 2. Attach using 13mm x 16 Hex bolts, lock washers and flat washers from Castor bolt kit and tighten.

Ensure that both locking Castors are on same end of the Trolley. We suggest mounting locking Castors at the Handle side of the Trolley.

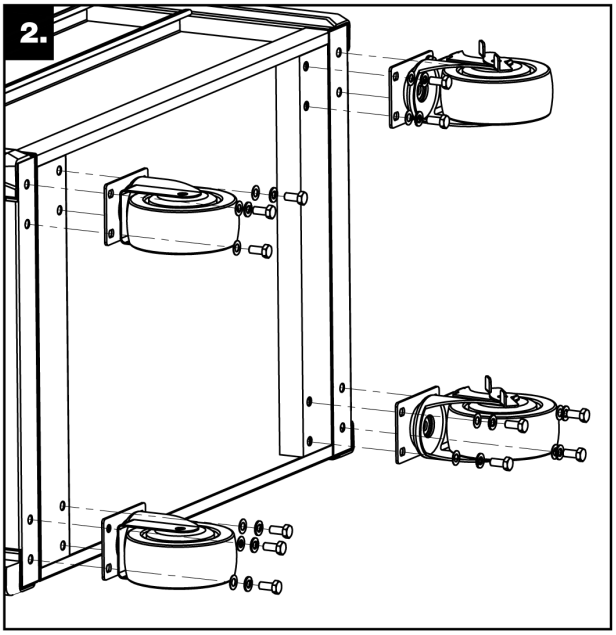

Step 3: Attaching the Side Handle
Align the mounting holes of the handle brackets with the holes in the side of the Trolley. Attach using the Hex Bolts

⚠ NOTE
READ CAREFULLY BEFORE USE:

Pt1. Using the manual drawer retention system requires users to close all drawers until it clicks into the closed position.

Pt2. Locking: ensure all drawers are in the closed position. Drawers will not lock if they are not closed correctly.

Pt3. For any issues regarding locking/closing this toolbox please call Kincrome on 1300 657 528.

Ensure drawers are fully closed prior to closing lid and locking the chest

TOOL TROLLEY 5 DRAWER
Part No. K7625

REPLACEMENT PARTS

ITEM	PART NO.	DESCRIPTION	QUANTITY
1	K7778	Lock & Key	1
2	K7779	Key Only (Specify Number)	1
3	K7625-3	Trolley Handle	1
4	K7625-4	Ball Bearing Slide (Pair)	2
5	K7625-5	Alum Drawer Grip (Large)	1
6	K7625-6	Eva Mat Pack 6 Pce	6

ITEM	PART NO.	DESCRIPTION	QUANTITY
7	K7625-7	Large Drawer (Shallow)	1
8	K7625-8	Large Drawer (Deep)	1
9	K7625-9	Castor Fixed x 1	1
10	K7625-10	Castor Swivel x 1 (Brake)	1
11	K7625-11	Castor Bolt Pack	1

Caution: Take Safety Precautions When Using Your Toolbox

Do not open more than one drawer at a time. | Do not step on drawers. | Do not let children near the Toolbox. | Do not separate Chest from Trolley. | Do not exceed Drawer Load Limit | Not suitable for mounting in Vehicles | Set the brake on the locking castors unless your are moving the Toolbox. | Lock drawers and lid before moving the Toolbox.

KINCROME TOOLS + EQUIPMENT™

National Head Office
National Distribution and Showroom
3 Lakeview Dve, Caribbean Business Park
Scoresby Victoria 3179 Australia
ABN 41 007 185 006

Administration
T (03) 9730 7100 F (03) 9730 7199
E enquiries@kincrome.com.au
W kincrome.com.au

Customer Service Centre
T 1300 657 528 F 1300 556 005

Made to Kincrome Tools & Equipment Pty Ltd Global specifications and quality standards in China
Kincrome UK Ltd PO Box 468 Southampton SO30 9EP

Australia & Global	UK & EU
www.kincrome.com.au	www.kincrome.co.uk
enquiries@kincrome.com.au	enquiries@kincrome.co.uk