TOOL CART Heavy Duty 3 Tier
Part No. K7743

OPERATION MANUAL

TRAY LOAD LIMIT: 45kg
TOTAL LOAD LIMIT: 150kg

⚠ IMPORTANT:

THIS OPERATING MANUAL CONTAINS IMPORTANT SAFETY INFORMATION. READ CAREFULLY AND UNDERSTAND ALL INFORMATION BEFORE OPERATING TOOL. SAVE THIS MANUAL FOR FUTURE USE.

PARTS LIST

32 x 5mm Hex Bolts for uprights

32 x Washers

8 x 5mm Hex Bolts for Push Handles

13mm x 16 Bolt/ Washer Kit for Castors

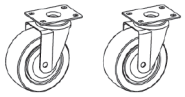

Non-Locking Castors (2)

Locking Castors (2)

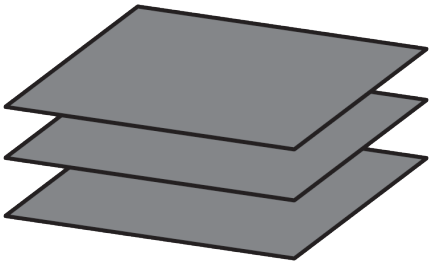

3 x Liners

2 x Trolley Handles

1 x Badge

TOOLS NEEDED

2 People

13mm Spanner

5mm Hex Key

TOOL CART Heavy Duty 3 Tier
Part No. K7743

ASSEMBLY INSTRUCTIONS

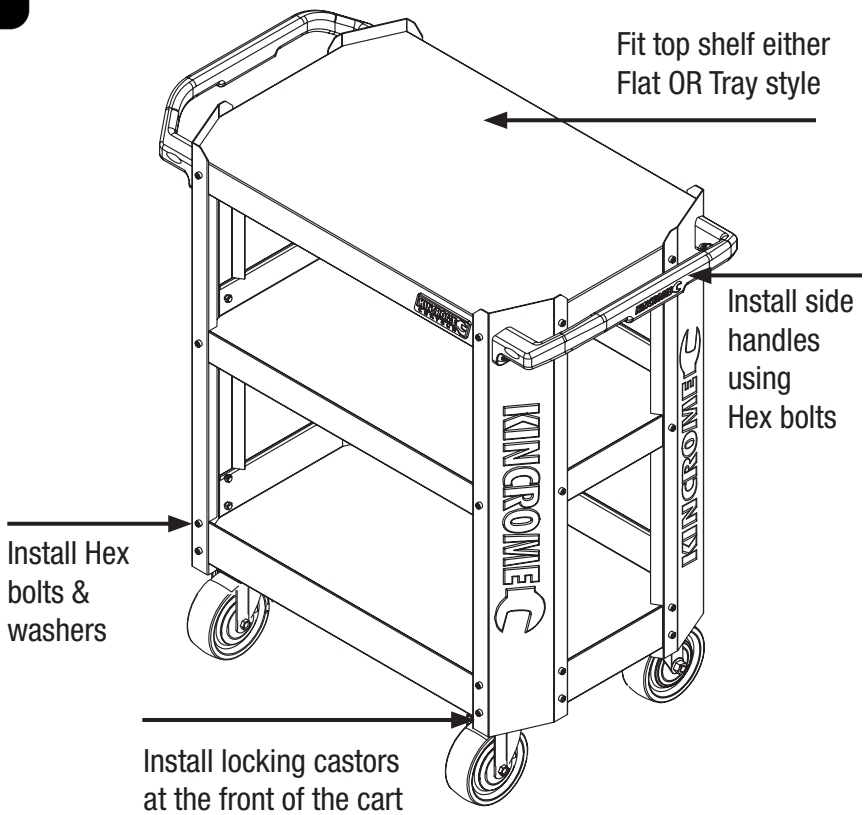

Step 1: Remove all contents from carton and reference the parts list ensuring you have all the parts

Step 2: Starting with the base shelf attach each vertical upright using the supplied 5mm hex bolts and washers
NOTE: Do not fully tighten hex bolts until unit is assembled

Step 3: Repeat Step 1 for the middle and top shelf
NOTE: Fit the top shelf according to your preference, either Flat style or Tray style

Step 4: Tension all hex bolts ensuring they are tight

Step 5: Carefully lie the Cart on its side and fit the 4 swivel castors using the bolts and washers provided ensuring they are tightly fastened.
NOTE: Install the two locking castors on the same side so they can be easily accessed, we suggest fitting both to the forward facing side of the cart.

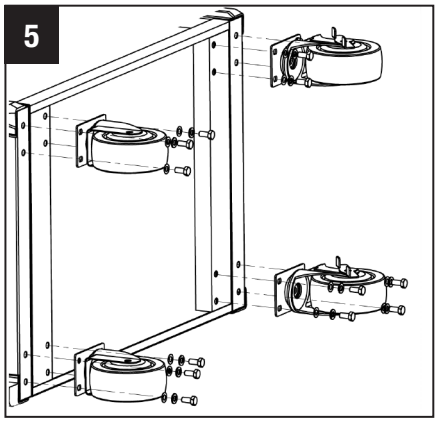

Step 6: Stand Cart back on the castors and fit the two side handles using the Hex bolts provided. Attach the Kincrome badge to top right hand shelf and insert each tray mat placing the thick mat on the top shelf.

TOOL CART Heavy Duty 3 Tier
Part No. K7743

SPARE PARTS

REPLACEMENT PARTS

ITEM	PART NO.	DESCRIPTION	QUANTITY
1	K7743-1	Top Shelf	1
2	K7743-2	Middle Shelf	1
3	K7743-3	Bottom Shelf	1
4	K7743-4	EVA Mat Pack (3)	1
5	K7743-5	Side Handle (1)	1
6	K7743-6	Castor Pack (4)	1

ITEM	PART NO.	DESCRIPTION	QUANTITY
7	K7743-7	Badge	1
8	K7743-8	Hex Bolt/Washer Pack	1
9	K7743-9	Castor Bolt/ Washer Pack	1
10	K7743-10	Main Upright Left	1
11	K7743-11	Main Upright Right	1

Caution: Take Safety Precautions When Using Your Toolbox

Do not open more than one drawer at a time. | Do not step on drawers. | Do not let children near the Toolbox. | Do not separate Chest from Trolley. | Do not exceed Drawer Load Limit | Not suitable for mounting in Vehicles | Set the brake on the locking castors unless your are moving the Toolbox. | Lock drawers and lid before moving the Toolbox.

KINCROME TOOLS + EQUIPMENT™

National Head Office
National Distribution and Showroom
3 Lakeview Dve, Caribbean Business Park
Scoresby Victoria 3179 Australia
ABN 41 007 185 006

Administration
T (03) 9730 7100 F (03) 9730 7199

Customer Service Centre
T 1300 657 528 F 1300 556 005

E enquiries@kincrome.com.au
W kincrome.com.au