TOOL TROLLEY 7 DRAWER
Part No. K7747

INCLUDES PRY BAR HOLDERS

OPERATION MANUAL

⚠ IMPORTANT:

THIS OPERATING MANUAL CONTAINS IMPORTANT SAFETY INFORMATION. READ CAREFULLY AND UNDERSTAND ALL INFORMATION BEFORE OPERATING TOOL. SAVE THIS MANUAL FOR FUTURE USE.

PARTS LIST

8 x Hex Bolts for Push Handle

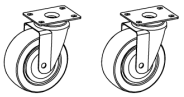

Non-Locking Castors (2)

13mm x 16 Bolts (16) for Castors

Locking Castors (2)

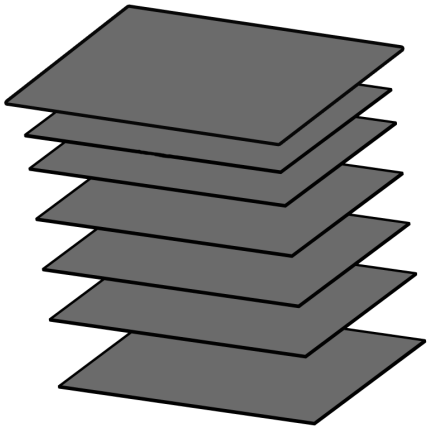

7 x Liners

TOOLS NEEDED

2 People

13mm Spanner

Hex Key

TOOL TROLLEY 7 DRAWER
Part No. K7747

ASSEMBLY INSTRUCTIONS

Step 1: Assembly Preparation

Remove all contents from box. Reference the parts list to make sure you have all the parts.

⚠ NOTE

Place a cover on the floor to prevent damage to the surface of the Trolley.

Step 2: Attaching Castors

Using two people, tip the cart so it is laying drawer side up. Align holes in locking and non-locking Castors with matching holes in the bottom tray as shown in Figure 2. Attach using 13mm x 16 Hex bolts, lock washers and flat washers from Castors bolt kit and tighten.

Ensure that both locking Castors are on the same end of the Trolley. We suggest mounting locking castors at the front of the Trolley.

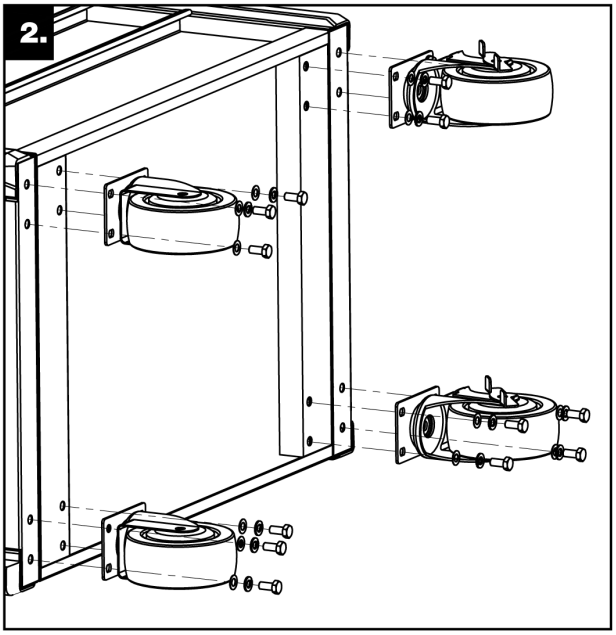

Step 3: Attaching the Side Handles

Align the mounting holes of the handle brackets with the holes in the side of the Trolley. Attach using the Hex Bolts.

TOOL TROLLEY 7 DRAWER
Part No. K7747

REPLACEMENT PARTS

ITEM	PART NO.	DESCRIPTION	QUANTITY
1	K7778	Lock & Key	1
2	K7779	Key Only (Specify Key Number)	1
3	K7747-1	MDF Wood Top	1
4	K7747-4	Plastic Trolley Top	1
5	K7747-5	Trolley Handle (1)	1
6	K7747-6	Alum Drawer Grip	1
7	K7747-7	Drawer (Shallow)	1
8	K7747-8	Drawer (Deep)	1

ITEM	PART NO.	DESCRIPTION	QUANTITY
9	K7747-9	Ball Bearing Slide Set (2)	2
10	K7747-10	Swivel Castor Lock	1
11	K7747-11	Swivel Castor	1
12	K7747-12	Castor Nut & Bolt (Kit)	1
13	K7747-13	Folding Side Shelf	1
14	K7747-14	Eva Mat Pack (9)	9
15	K7747-15	Drawer Lock	1
16	K7747-16	BB Slide Hard Close 45mm	2

KINCROME TOOLS + EQUIPMENT™

National Head Office
National Distribution and Showroom
3 Lakeview Dve, Caribbean Business Park
Scoresby Victoria 3179 Australia
ABN 41 007 185 006

Administration
T (03) 9730 7100 F (03) 9730 7199

Customer Service Centre
T 1300 657 528 F 1300 556 005

E enquiries@kincrome.com.au
W kincrome.com.au