TOOL TROLLEY 9 DRAWER
Part No. K7759

OPERATION MANUAL

⚠ IMPORTANT:

THIS OPERATING MANUAL CONTAINS IMPORTANT SAFETY INFORMATION. READ CAREFULLY AND UNDERSTAND ALL INFORMATION BEFORE OPERATING TOOL. SAVE THIS MANUAL FOR FUTURE USE.

PARTS LIST

8 x Hex Bolts for Trolley Handle

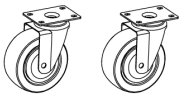

Non-Locking Castors (2)

13mm x 16 Bolts (16) for Castors

Locking Castors (2)

Trolley Handles x 2

Keys x 2

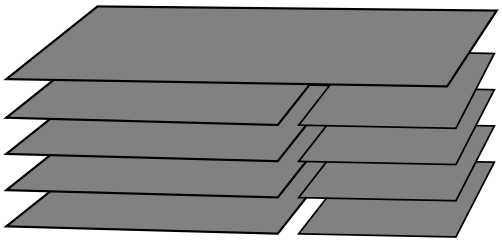

9 x Liners

TOOLS & ASSISTANCE NEEDED

2 People

13mm Spanner

Hex Key

TOOL TROLLEY 9 DRAWER
Part No. K7759

ASSEMBLY INSTRUCTIONS

Step 1: Assembly Preparation
Remove all contents from box. Reference the parts list to make sure you have all the parts.

⚠ NOTE
Place a cover on the floor to prevent any damage to surface of the Trolley.

Castors are prefitted on large trolleys.

Step 2: Attaching Castors
Using two people, tip the trolley so it is laying drawer side up. Align holes in locking and non-locking Castors with matching holes in the bottom tray as shown in figure 2. Attach using 13mm x 16 Hex bolts, lock washers and flat washers from Castor bolt kit and tighten.

Ensure that both locking Castors are on same end of the Trolley. We suggest mounting locking Castors at the front of the Trolley.

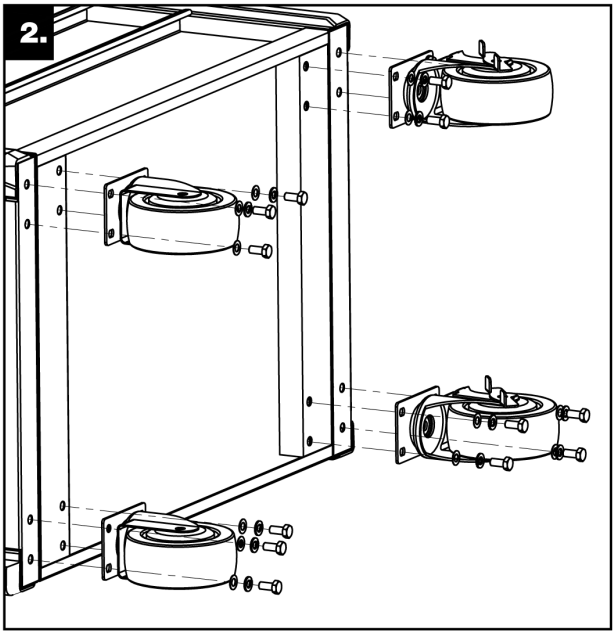

Step 3: Attaching the Side Handles
Align the mounting holes of the handle brackets with the holes in the side of the Trolley. Attach using the Hex Bolts

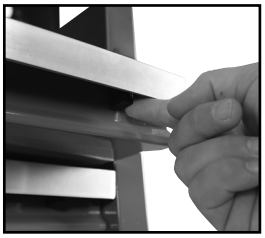

Release "Secure Lock" to open each drawer

Ensure drawers are fully closed prior to closing lid and locking the chest

TOOL TROLLEY 9 DRAWER
Part No. K7759

REPLACEMENT PARTS

ITEM	PART NO.	DESCRIPTION	QUANTITY
1	K7778	Lock & Key	1
2	K7779	Key Only (Specify Key Number)	1
3	K7759-1	MDF Wood Top	1
4	K7759-4	Plastic Trolley Top	1
5	K7759-5	Trolley Handle (1)	1
6	K7759-6	Alum Drawer Grips (Pack x 3)	3
7	K7759-7	Drawer Extra Long	1
8	K7759-8	Drawer Large (Shallow)	1
9	K7759-9	Drawer Large (Medium)	1
10	K7759-10	Drawer Large (Deep)	1

ITEM	PART NO.	DESCRIPTION	QUANTITY
11	K7759-11	Drawer Small (Shallow)	1
12	K7759-12	Drawer Small (Medium)	1
13	K7759-13	Drawer Small (Deep)	1
14	K7759-14	Ball Bearing Slide Set (2)	2
15	K7759-15	Swivel Castor Pack (2)	2
16	K7759-16	Swivel Castor Pack (2) Brakes	2
17	K7759-17	Castor Nut & Bolt Set	1
18	K7759-18	Folding Side Shelf	1
19	K7759-19	Eva Mat Pack (8)	8
20	K7759-20	Drawer Latch	1

KINCROME
TOOLS + EQUIPMENT™

National Head Office
National Distribution and Showroom
3 Lakeview Dve, Caribbean Business Park
Scoresby Victoria 3179 Australia
ABN 41 007 185 006

Administration
T (03) 9730 7100 F (03) 9730 7199

Customer Service Centre
T 1300 657 528 F 1300 556 005

E enquiries@kincrome.com.au
W kincrome.com.au