KINCROME TOOL ARMOUR

Hutch 1500mm (59") - 1 Shelf

Operation Manual

K77805

IMPORTANT: THIS OPERATING MANUAL CONTAINS IMPORTANT SAFETY INFORMATION, READ CAREFULLY & UNDERSTAND ALL INFORMATION BEFORE OPERATING. SAVE THIS MANUAL FOR FUTURE USE



Do not open more than one drawer at a time. | Do not step on drawers. | Do not let children near the Toolbox. | Do not separate Chest from Trolley. | Do not exceed Drawer Load Limit | Not suitable for mounting in Vehicles | Lock drawers and lid before moving the Toolbox.



Specifications

Net Weight	107kg
Material	Heavy Gauge Steel
Measurements	L 1500 x W 625 x H 763mm

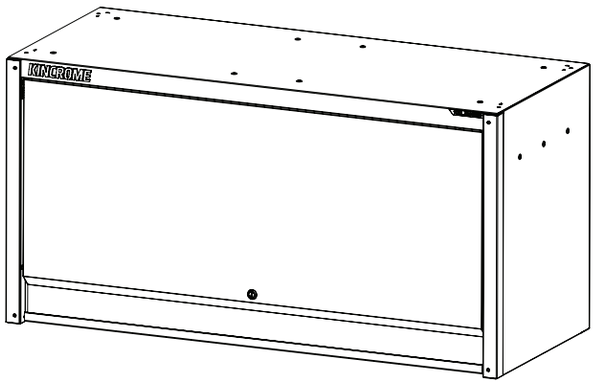

Maintenance

> Periodically tighten all hardware
> Lubricate the lock with graphite annually
> Use a damp Microfibre cloth to clean all surfaces

Parts List



2 X LED LIGHTS



2 X KEYS

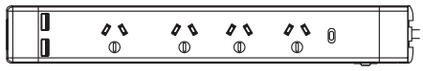

1 X MAGNETIC POWER BOARD

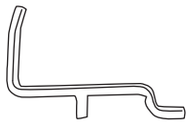

10 X PEGBOARD HOOKS

HARDWARE INCLUDED

- **NOTE:** Begin product assembly close to the final intended location of your cabinet. The product is heavy and may be difficult to move after assembly.

Part Number	QTY	Description
AA	5	SHELF CLIP
BB	4	STORAGE HOOK
CC	20	HEX BUTTON CAP BOLT
DD	6	CABLE CLIP
EE	1	HEX KEY
FF	3	CONNECTING PLATE

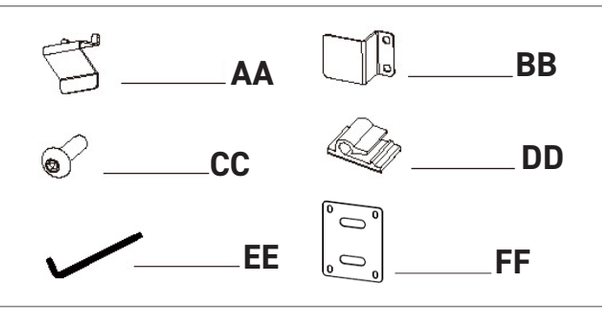

- **NOTE:** Keys are attached to the door.

Part Number	QTY	Description
A	1	HUTCH
B	1	SHELF
C	2	LED LIGHT
D	1	POWER BOARD & MAGNETIC HOLDER

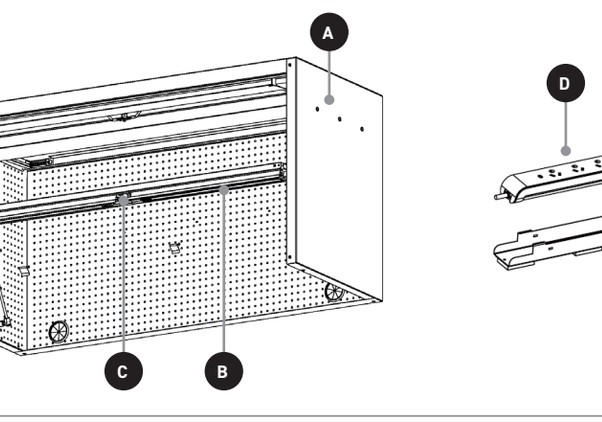

General Safety Warnings

K77805

1. To reduce the risk of injury, please read and follow the safety instructions below before assembling and using this product.
2. Two or more people are required for the assembly of this product.
3. Use the brakes when this product is not being moved. This prevents the product from rolling.
4. Do not tow the product with power equipment.
5. Do not alter this product in any manner. For example, do not weld external lock bars or attach electrical equipment.
6. Before locking the Side Locker, ensure there are no obstructions in order for the door to completely close and lock bars to work properly.

Caution: Do not attach or mount this product to a vehicle or mobile trailers. This may cause personal injury or product damage. Mounting this product to any vehicle or mobile trailers in any manner will void warranty.

Caution: Do not stand on this product. You may fall which may cause personal injury or product damage.

Caution: Be careful during assembly. The product may become unstable and tip, which may cause personal injury or product damage.

Caution: Keep the product on level surfaces. The product may become unstable and tip if stored or moved on an unlevel surface, which may cause personal injury or product damage.

Caution: Lock the door before moving this product. The door could come open and make the product unstable, which may cause personal or product damage.

Electrical Safety

1. Power lead plugs must match the outlet. Never modify the plug in any way. Do not use any adapter plugs with earthed (grounded) power tools. Unmodified plugs and matching outlets will reduce risk of electric shock.
2. Avoid body contact with earthed or grounded surfaces, such as pipes, radiators, ranges and refrigerators. There is an increased risk of electric shock if your body is earthed or grounded.
3. Do not expose to rain or wet conditions. Water entering a electrical products will increase the risk of electric shock.
4. Do not abuse the cord. Never use the cord for carrying, pulling or unplugging the power tool. Keep cord away from heat, oil, sharp edges or moving parts. Damaged or entangled cords increase the risk of electric shock.
5. If operating a power tool in a damp location is unavoidable, use a residual current device (RCD) protected supply. Use of an RCD reduces the risk of electric shock.
6. Do not operate powered products in explosive atmospheres, such as in the presence of flammable liquids, gases or dust. Powered products create sparks which may ignite the dust or fumes.
7. Keep children and bystanders away while operating any powered products. Distractions can cause you to lose control.

Service

Have your power tool serviced by a qualified repair person using only identical replacement parts. This will ensure that the safety of the power tool is maintained.

Risk of Electric Shock

- Do Not Overload power boards by “piggy backing” plugs into one socket or by using double adaptors – all power boards have a maximum current rate.
- Do Not Plug high wattage appliances (such as toasters, kettles and heaters) into power boards – plug them directly to permanent power points instead.
- Do Not Use damaged, dirty or wet power boards. Do not expose to chemicals, oils or other liquids.
- Never use water to extinguish a fire caused by electrical equipment Do not attempt to open the product housing.
- There are no user-serviceable parts inside this product. Do not repair the unit yourself.
- Supervise young children to ensure they do not play with the product.
- Do not expose to naked flames or other heat sources.
- Do not drop or subject the device to undue shock.
- Keep device away from magnets at all times.
- Keep away from direct sunlight. Indoor use only.
- Unplug this device during lightning storms or when unused for long periods of time.

Operation Manual

K77805

Assembly

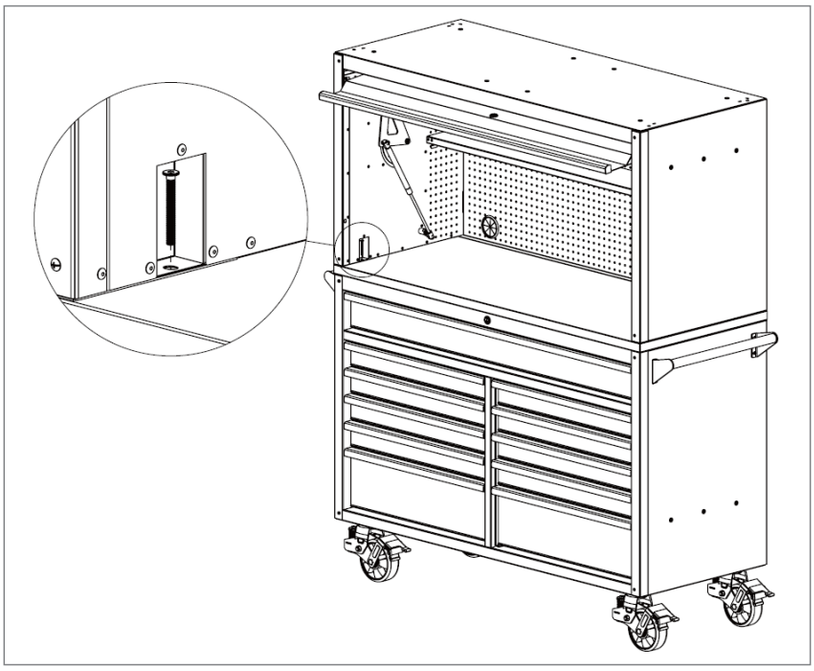

ATTACH THE HUTCH TO THE TOOL TROLLEY

- Remove the (2) M6 x50mm stainless steel bolts from top of trolley.
- Carefully lift the Hutch (A) and gently place on the Tool Trolley.
- Open the Hutch door and check for proper alignment of the connection holes through the stainless steel workbench, ensure the Hutch is ush with the front and sides of the Tool Trolley.
- Attach the Hutch and Tool Trolley with (2) M6 x50mm stainless steel bolts and tighten with supplied hex key.

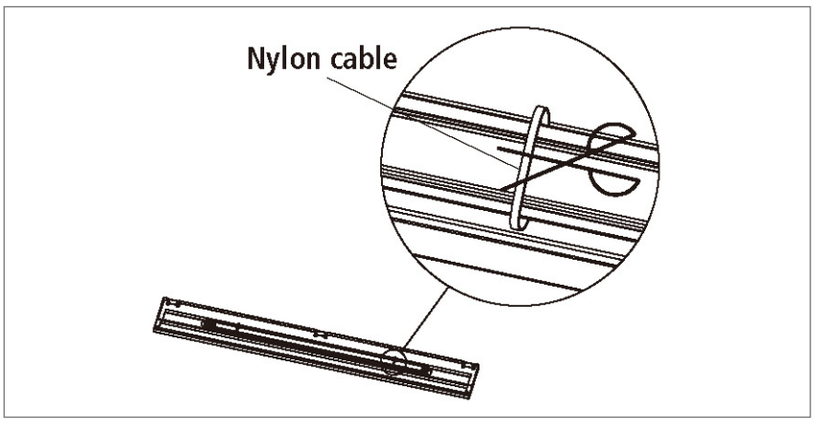

ATTACH THE LED LIGHT

- The LED light has been pre-installed on the shelf. Remove any packing materials and the nylon cable ties bundled at both ends of the LED light.

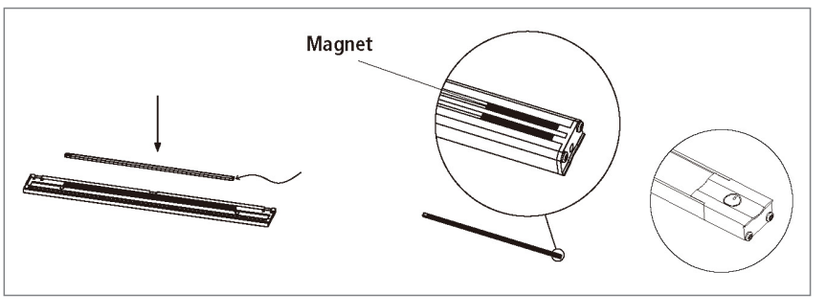

- Insert the power cable into the end of the LED fixture, and reposition so it's centered on the shelf.
  NOTE: The back of the LED fixture is magnetic and attaches directly to the articulating holder under the shelf.
- The LED has an in-built dimmer function in the power switch.
- Touch the power switch button once for 20% output. Touch again for 50%, again for 100%, and again for OFF.

Operation Manual

K77805

Assembly

ATTACH THE SHELF IN THE HUTCH

- Put the Shelf (B) into the inner cavity of Hutch (A) at the desired height and install the 5 pcs Shelf Clips (AA) to the pegboard to align with the notches in the Shelf.

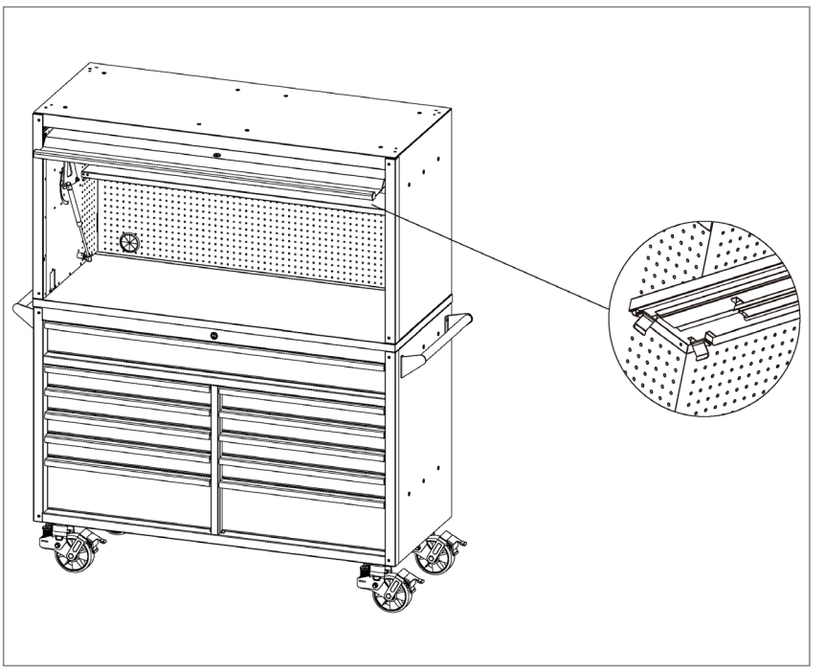

- Use the Cable clips (DD) to attach the power cord from the LED light

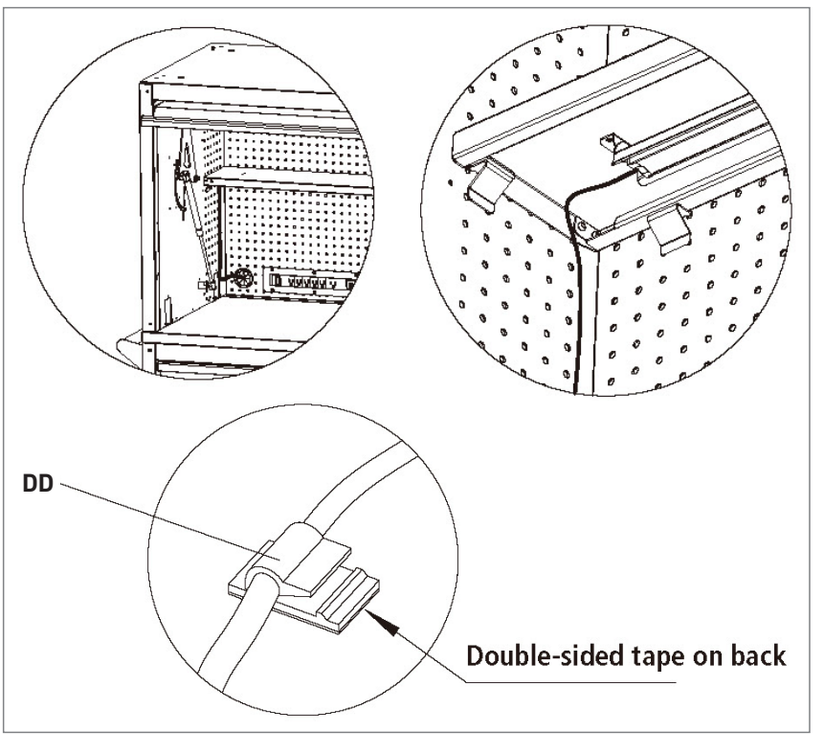

Operation Manual

K77805

Assembly

ATTACH THE STORAGE HOOKS

- Attach the Storage Hooks (BB) for the power cord on the back of the Hutch with 8 pcs Hex button botton cap bolt (CC).
- Tighten with Hex Key (EE).

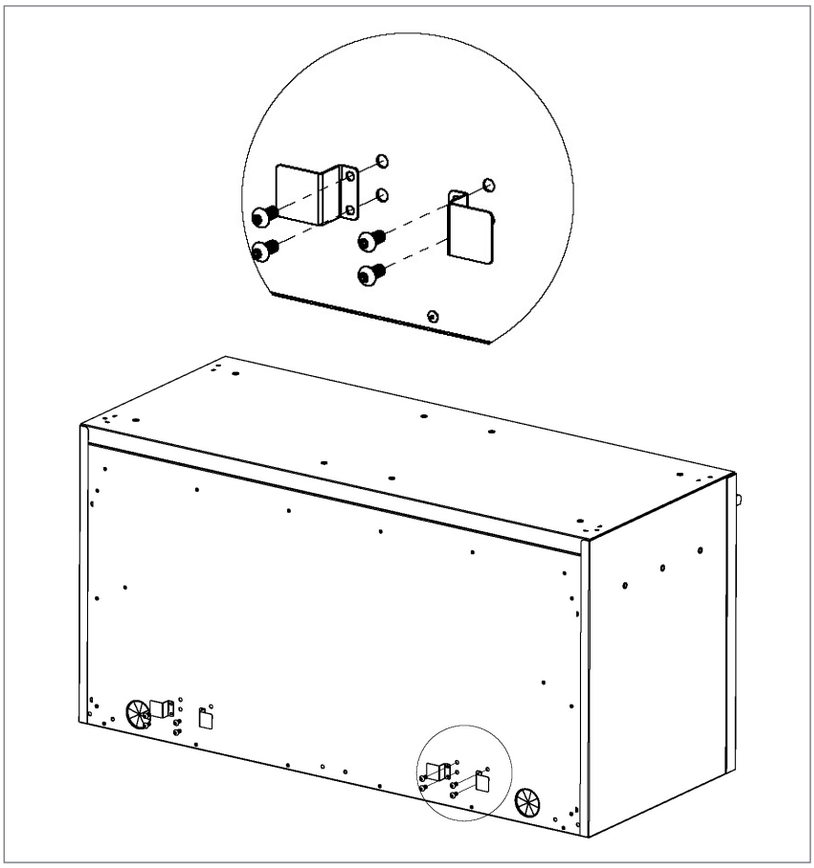

KINCROME TOOL ARMOUR

Hutch 1500mm (59”) - 1 Shelf

Operation Manual

K77805

Assembly

CONNECT THE HUTCH TO THE TROLLEY

- Place the Hutch on top of the Trolley.
- Attach the connecting plate (FF) over the holes at back of the product and secure with 4 bolts (CC), tighten with supplied hex key.
  NOTE: Repeat this process for other connecting plates.

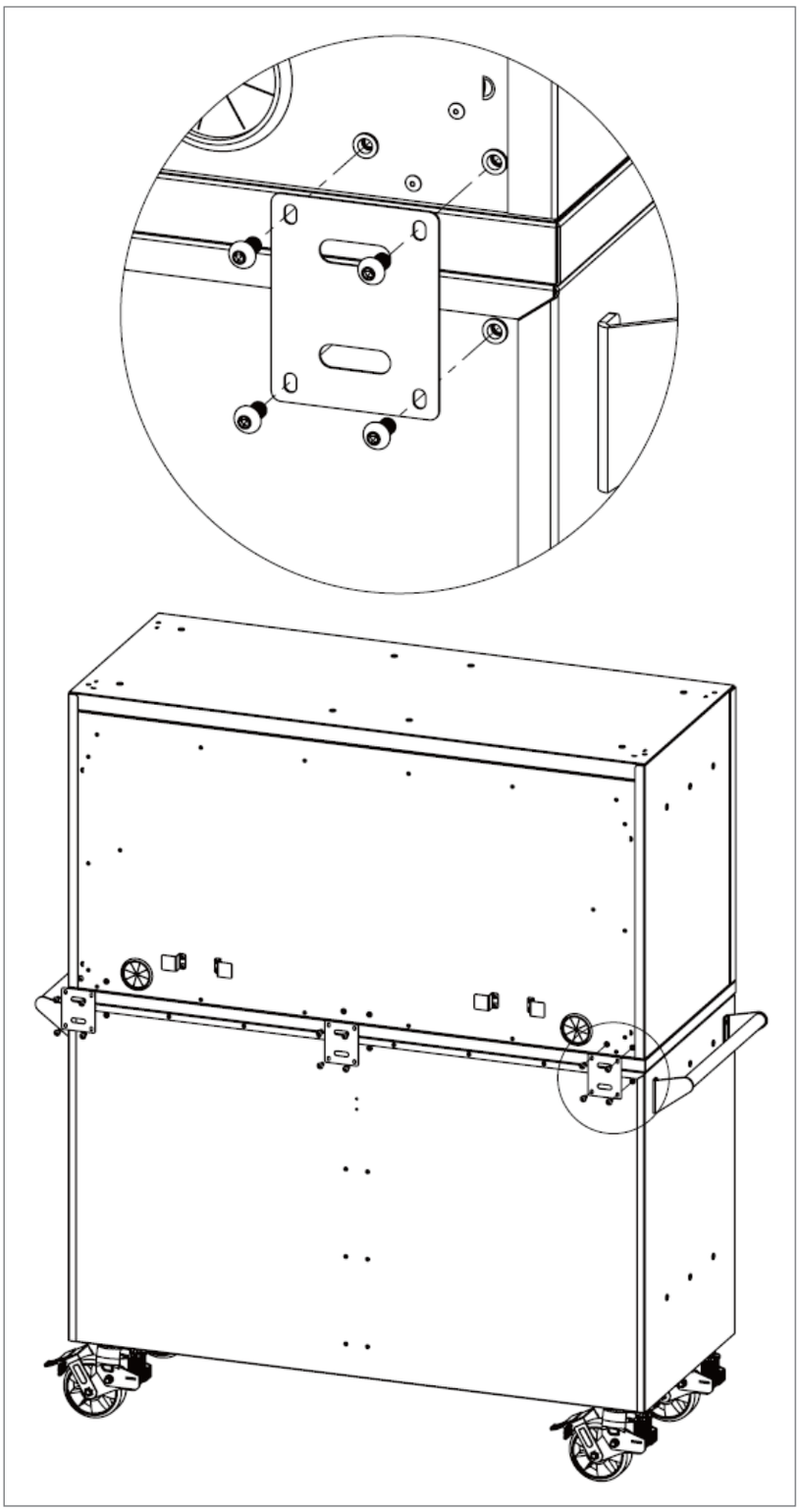

Maintenance

- Periodically clean the front, trim, and other surfaces with a mild detergent and water.
- Remove grease and oil with a standard nonflammable cleaning fluid.
- This product has been coated with an industrial UV-resistant powder coating for a durable and long lasting finish. To help protect the coating, do not allow harsh chemicals to remain on the surface for extended periods of time.

KINCROME TOOL ARMOUR

Hutch 1500mm (59”) - 1 Shelf

Operation Manual

K77805

Spare Parts

Ref	Part Number	QTY	Description
1	K77999-2	1	HUTCH/TOP/SIDE LOCKER LOCK & KEYS
2	K77999-6	1	KEYS ONLY
3	K77999-8	1	HUTCH GAS STRUTS (PAIR)
4	K77999-9	1	HUTCH SHELF
5	K77999-10	1	SHELF CLIPS X 5
6	K77999-11	1	PEG BOARD HOOKS X 10
7	K77999-12	1	POWERBOARD
8	K77999-13	4	CABLE GROMMET
9	K77999-14	2	LED LIGHT X 1
10	K77999-20	1	HUTCH CONNECTING PACK
11	K77999-23	1	LED LIGHT CLIP PACK
12	K77999-24	1	MAGNETIC POWERBOARD HOLDER

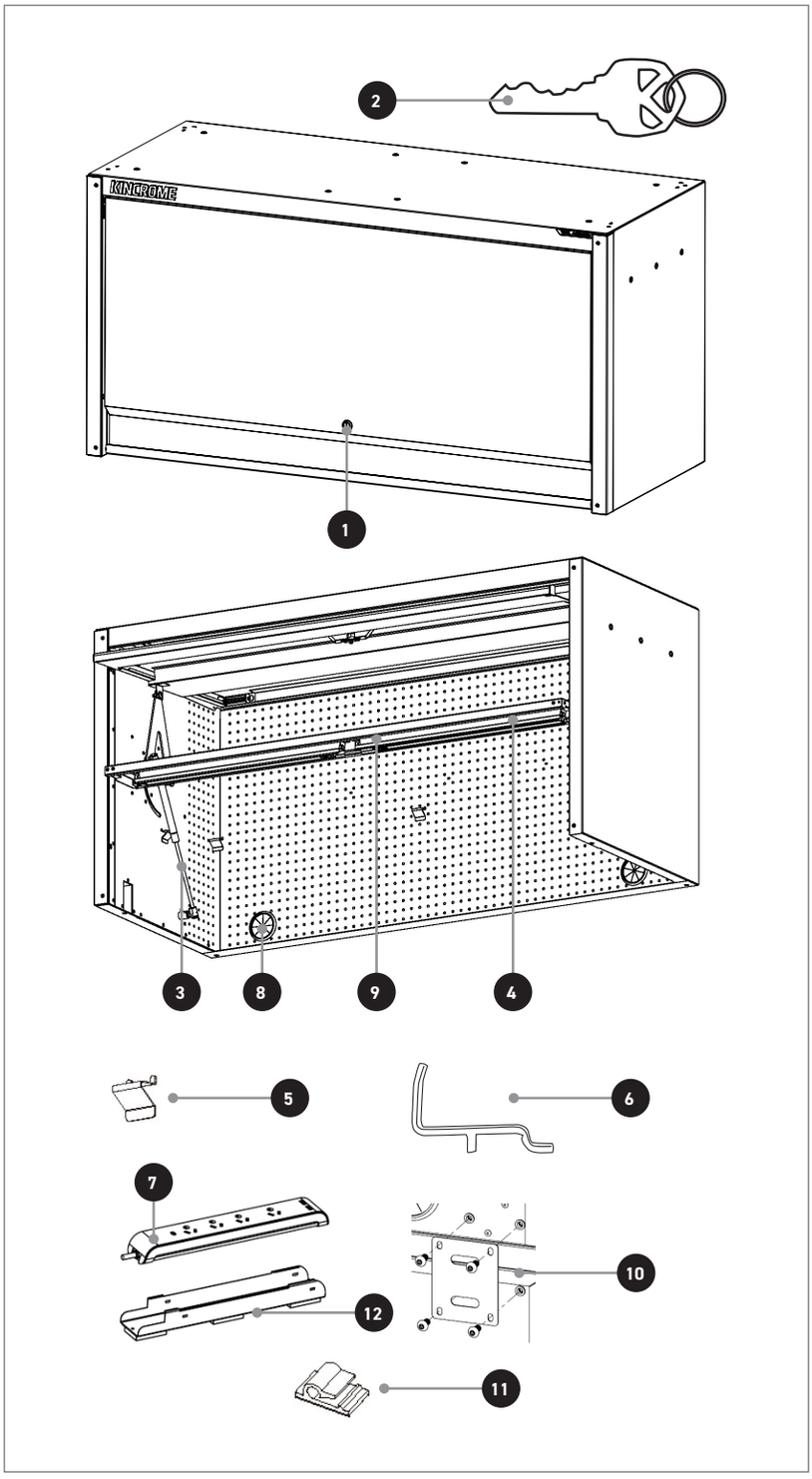

KINCROME TOOL ARMOUR

Hutch 1500mm (59”) - 1 Shelf

K77805

OFFICE CONTACT DETAILS

Phone: 1300 657 528 Email: enquiries@kincrome.com.au Website: www.kincrome.com.au

22 PAP

WARRANTY

5 YEAR WARRANTY

Our goods and services come with guarantees that cannot be excluded under the Australian Consumer Law. For major failures with the service, you are entitled: -to cancel your service contract with us; and -to a refund for the unused portion, or to compensation for its reduced value. You are also entitled to choose a refund or replacement for major failures with goods. If a failure with the goods or a service does not amount to a major failure, you are entitled to have the failure rectified in a reasonable time. If this is not done you are entitled to a refund for the goods and to cancel the contract for the service and obtain a refund of any unused portion. You are also entitled to be compensated for any other reasonably foreseeable loss or damage from a failure in the goods or service'. Kincrome Australia Pty Ltd of 3 Lakeview Drive, Caribbean Park, Scoresby, Victoria (Tel 1300 657 528) also provides the Kincrome Lifetime Guarantee and 12-Month Warranty (Kincrome Express Warranties) in respect of some of its products. If a product is covered by a Kincrome Express Warranty and it has materials or workmanship defects (other than defects caused by abnormal or non warranted use) which are covered under the terms of the relevant Kincrome Express Warranty, you can, at your cost, send the product to the above address for repair or replacement. Your rights under a Kincrome Express Warranty are in addition to any other rights you have under the Australian Consumer Law or other applicable laws. For further details and terms please check our product guide, visit www.kincrome.com.au or call us. Every effort is made to ensure advertised stock is available, but due to factors beyond the control of Kincrome Australia Pty. Ltd, not all products advertised in this catalogue may be available at all stores. Kincrome Australia Pty. Ltd. reserves the right to correct printing errors. All sizes shown are approximate only. Accessories shown do not come with the product unless otherwise specified. Due to printing process, colours in this catalogue may vary slightly to actual item. E. & O. E.© Copyright 2022. Reproduction in whole or in part is prohibited without written approval.