KINCROME

Tool Transporter Truck

BUILDER BLOCK SERIES



K51962
ED1 December 2025

FOR AGES 6+

WARNING:
CHOKING HAZARD - Contains Small Parts not for children under 3 years
SUPERVISION - This product is intended to be used under parental supervision at all times

KINCROME

Tool Transporter Truck

K51962

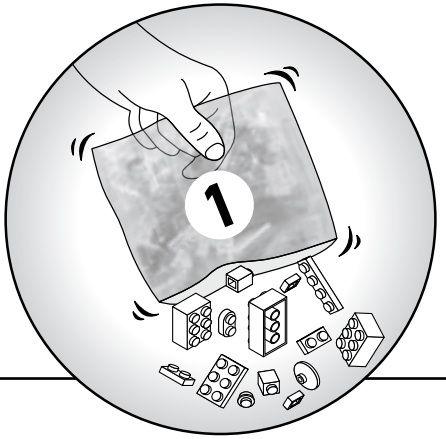



x3

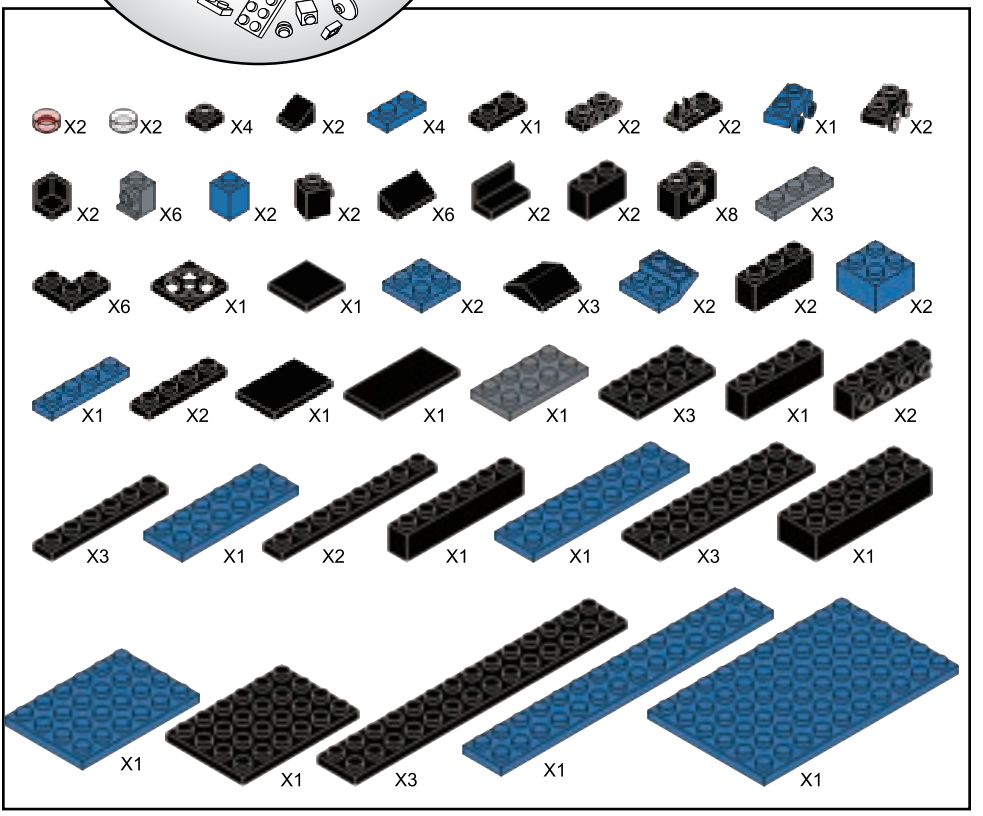

K51962

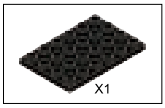

1-1



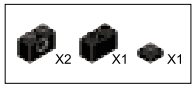

1-2

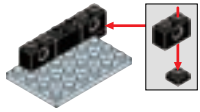

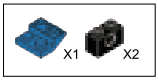

1-3

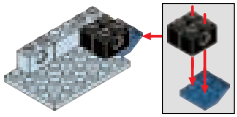

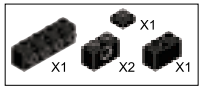

1-4

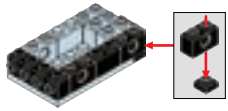

K51962

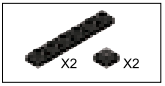

1-5

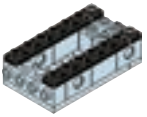

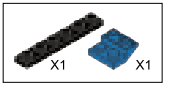

1-6

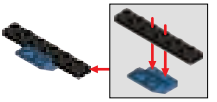

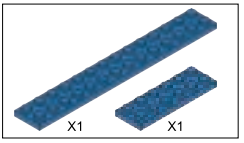

1-7

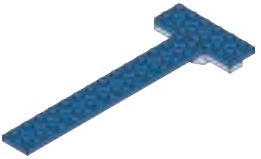

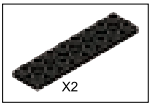

1-8



K51962

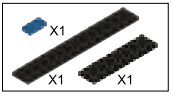

1-9



1-10

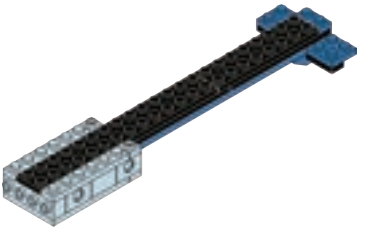

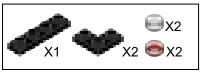

1-11

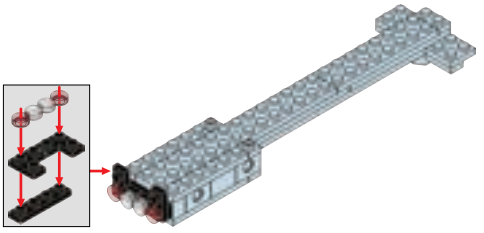

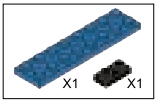

1-12

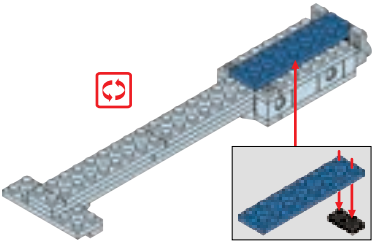

K51962

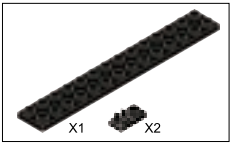

1-13

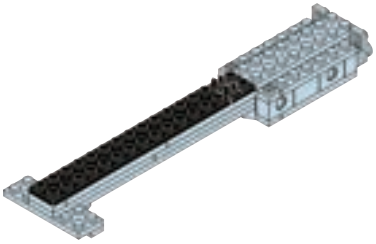



1-14

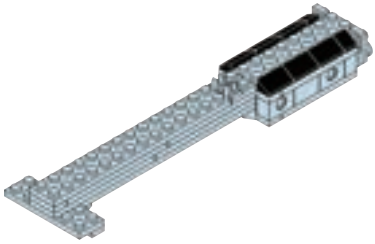

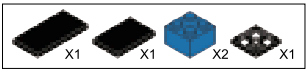

1-15

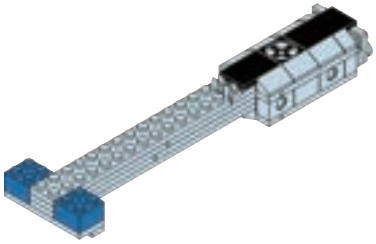

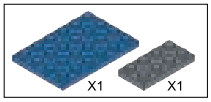

1-16

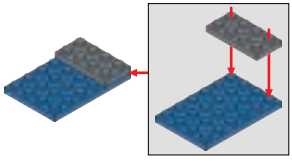

K51962

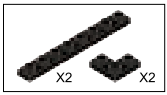

1-17

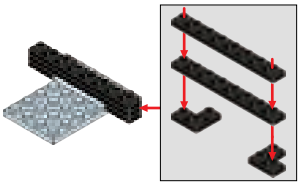

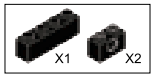

1-18

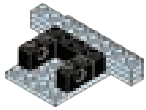



1-19

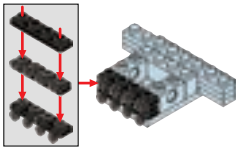



1-20

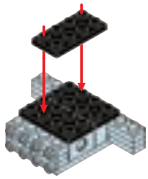

K51962

1-21

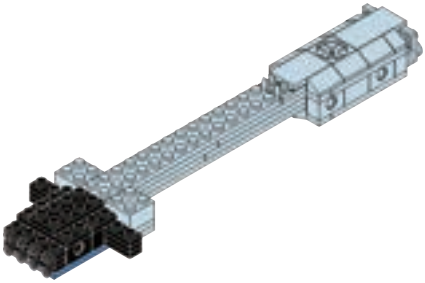

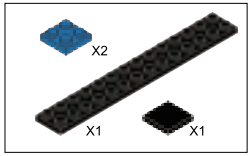

1-22

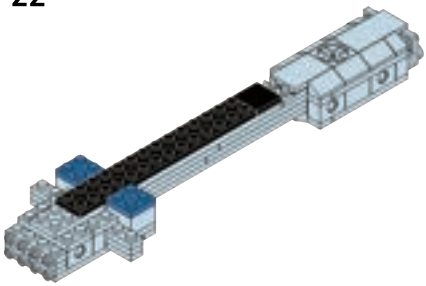

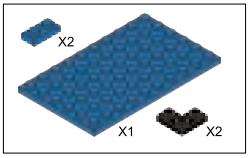

1-23

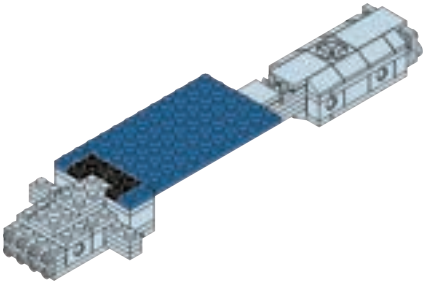

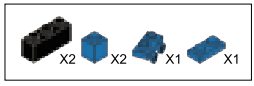

1-24

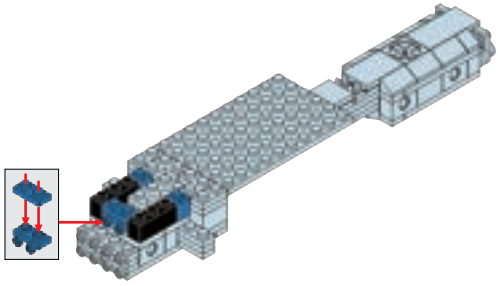

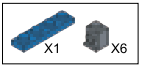

1-25

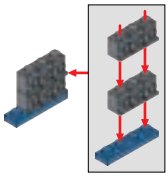



1-26

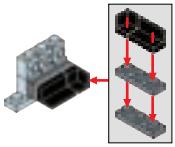



1-27

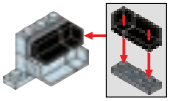

1-28

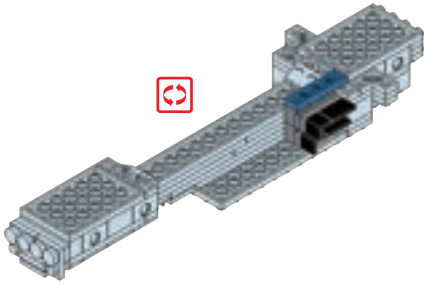

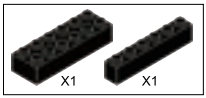

1-29

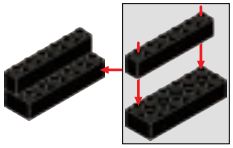



1-30

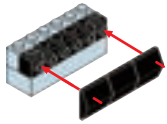

1-31

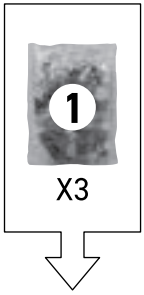

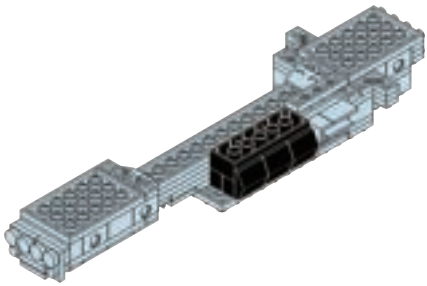

K51962


2


2

x3

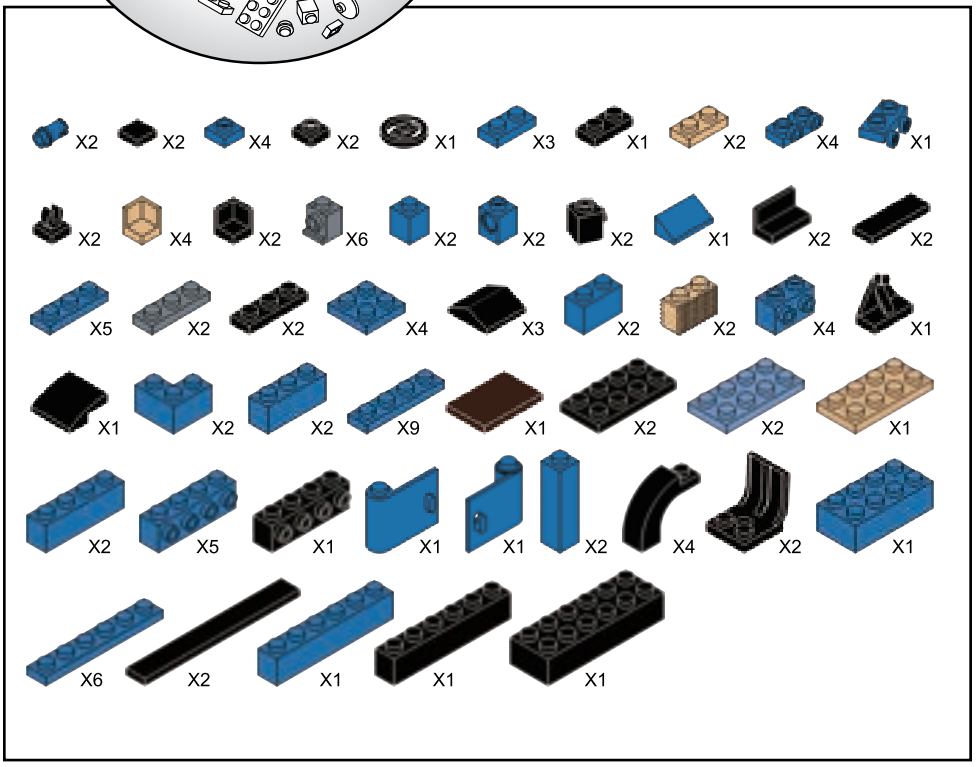
X2
X2
X4
X2
X1
X3
X1
X2
X4
X1
X2
X4
X2
X6
X2
X2
X2
X1
X2
X2
X5
X2
X2
X4
X3
X2
X2
X4
X1
X1
X2
X2
X9
X1
X2
X2
X1
X2
X5
X1
X1
X1
X2
X4
X2
X1
X6
X2
X1
X1
X1

K51962

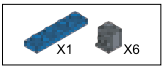

2-1

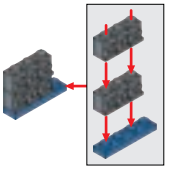



2-2

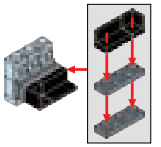

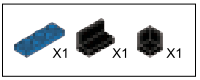

2-3

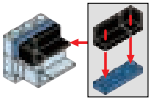

2-4

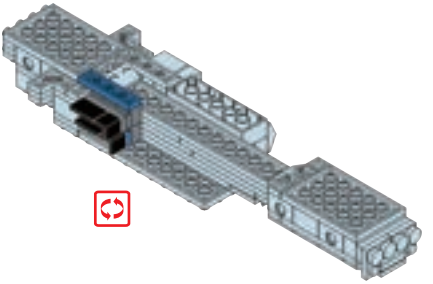

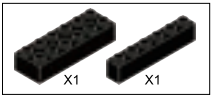

2-5

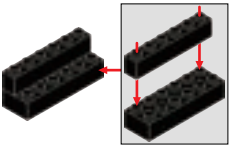

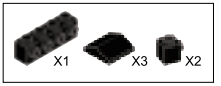

2-6

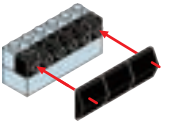

2-7

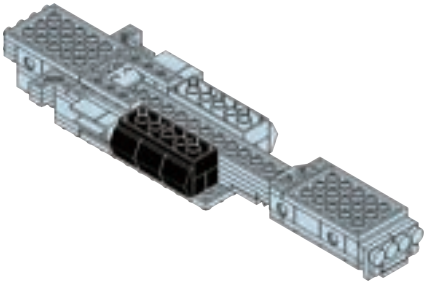

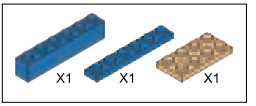

2-8

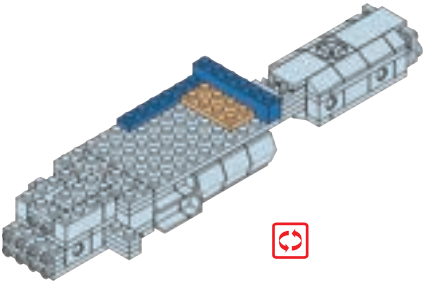

K51962

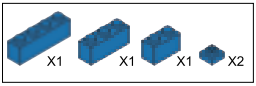

2-9

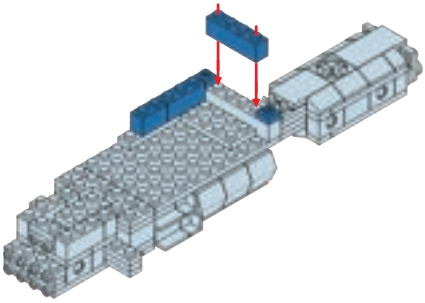

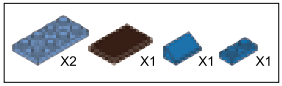

2-10

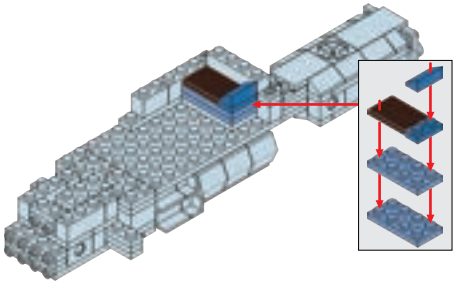



2-11

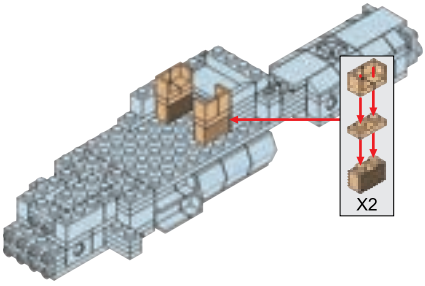

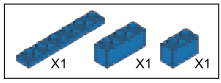

2-12

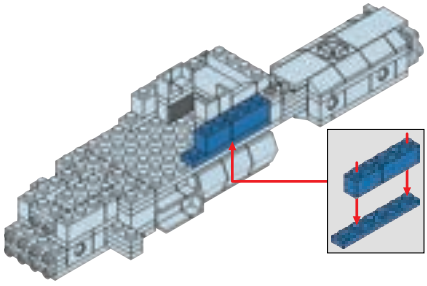

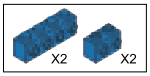

2-13

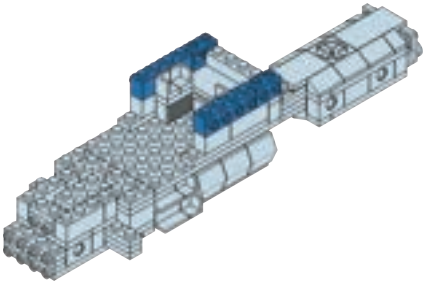



2-14

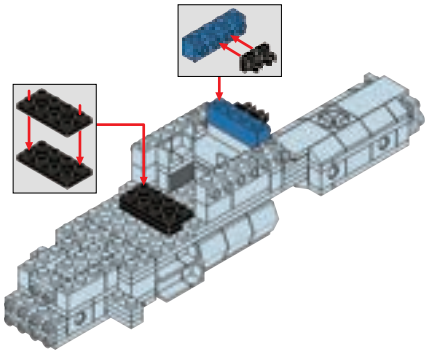

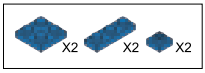

2-15

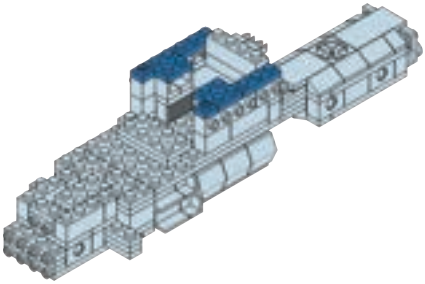

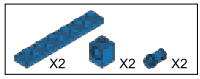

2-16

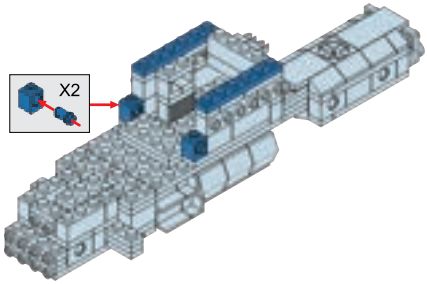

K51962

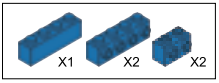

2-17

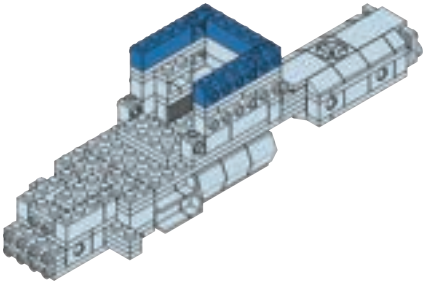

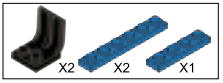

2-18

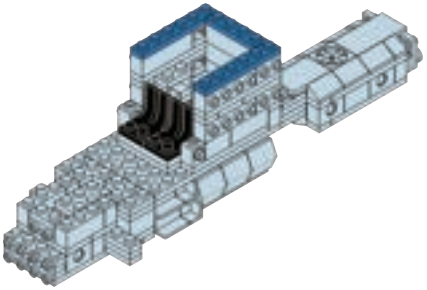

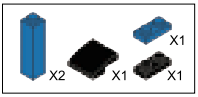

2-19

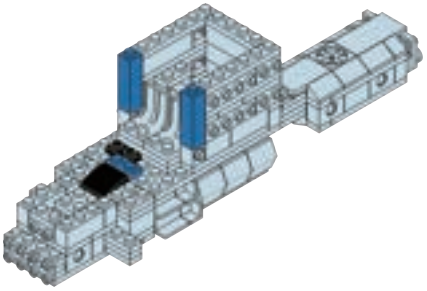

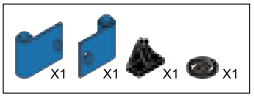

2-20

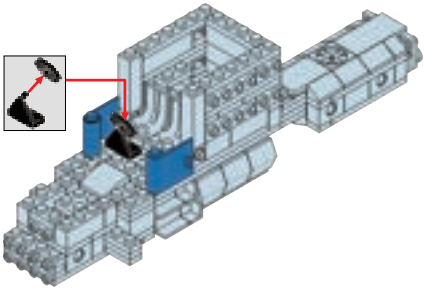

K51962

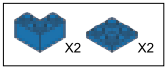

2-21

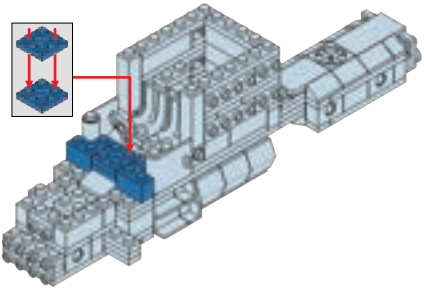

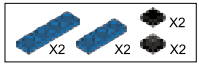

2-22

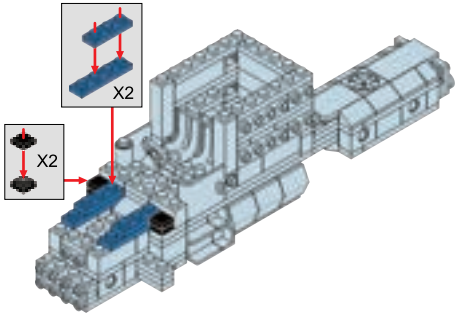

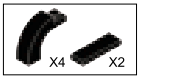

2-23

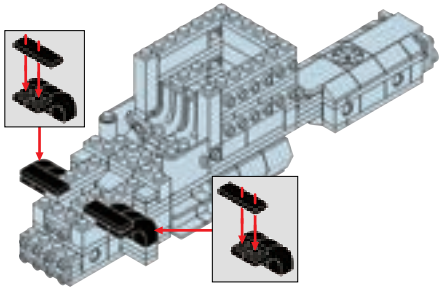



2-24

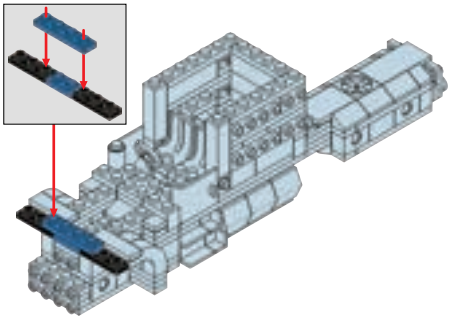

K51962

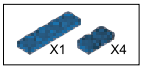

2-25

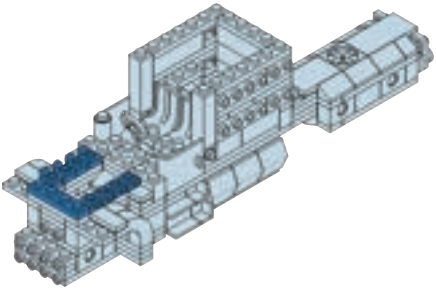

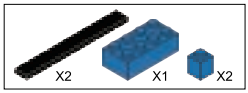

2-26

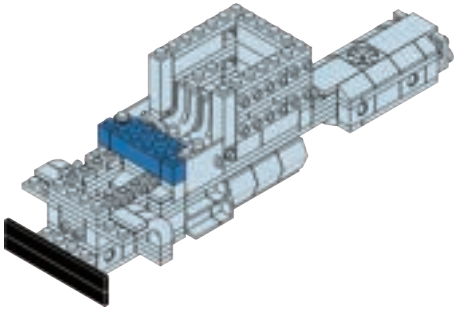

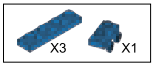

2-27

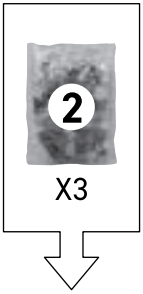

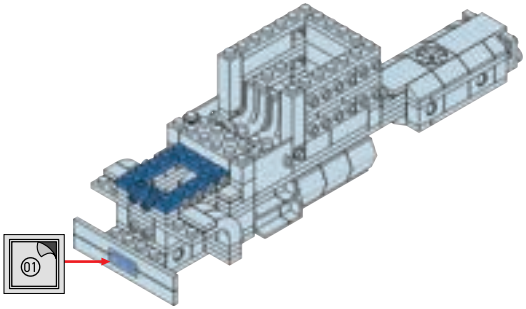

K51962


3


3

x3

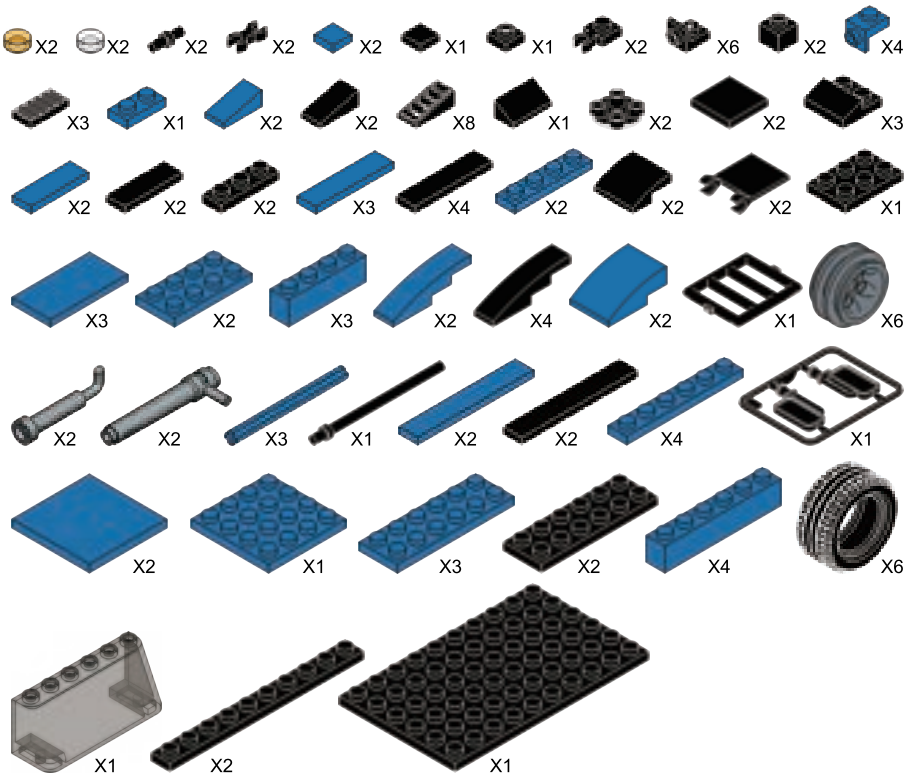
X2 X2 X2 X2 X2 X1 X1 X2 X6 X2 X4
X3 X1 X2 X2 X8 X1 X2 X2 X3
X2 X2 X2 X3 X4 X2 X2 X2 X1
X3 X2 X3 X2 X4 X2 X1 X6
X2 X2 X3 X1 X2 X2 X4 X1
X2 X1 X3 X2 X4 X6
X1 X2 X1

K51962

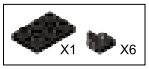

3-1

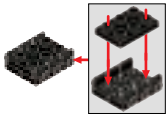



3-2

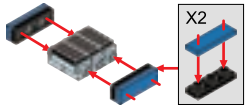

3-3

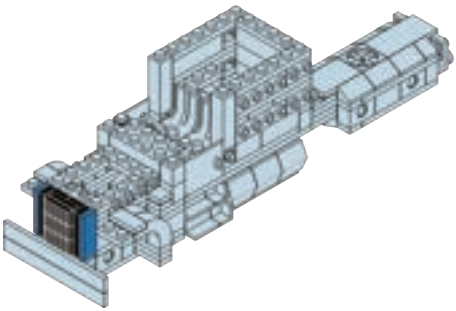

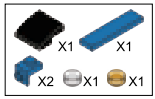

3-4

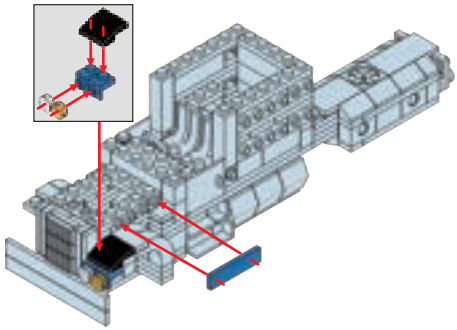

K51962

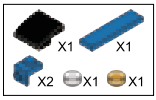

3-5

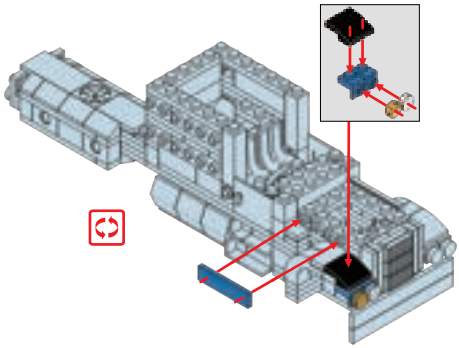

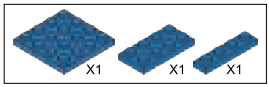

3-6

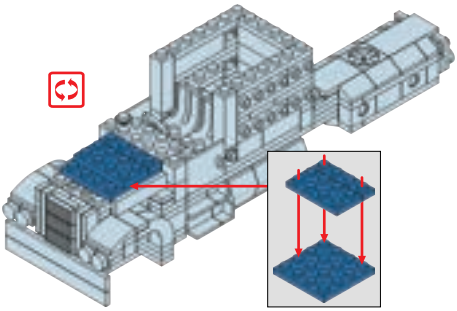

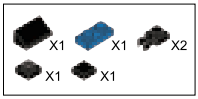

3-7

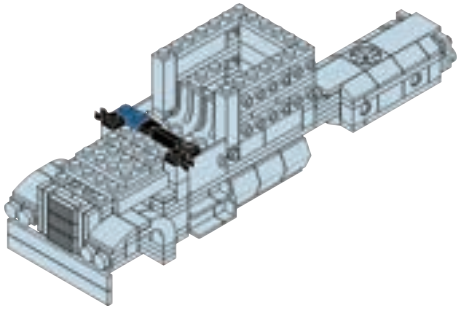

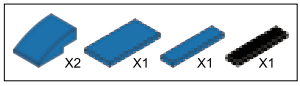

3-8

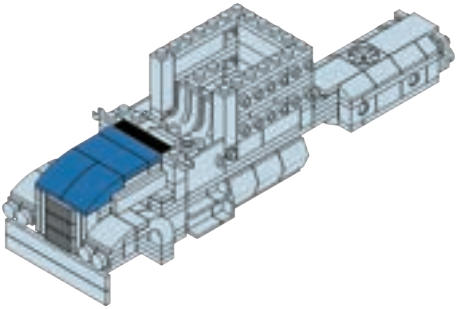

K51962

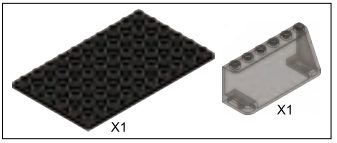

3-9

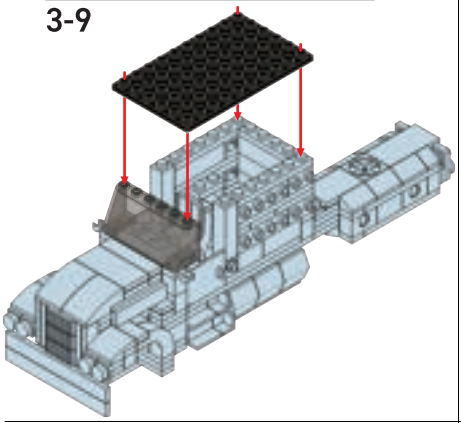

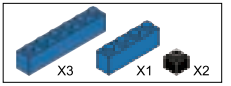

3-10

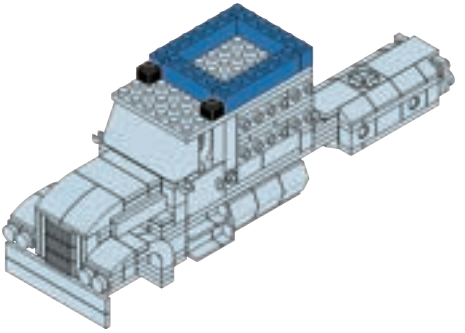

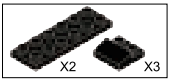

3-11

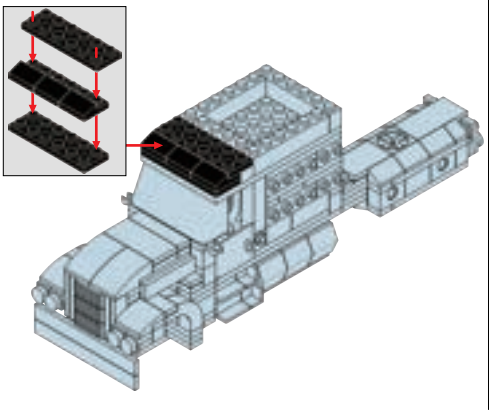

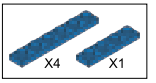

3-12

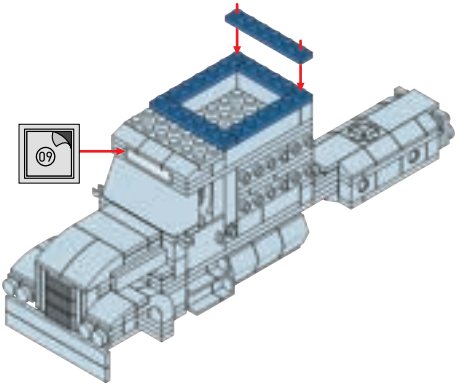

K51962

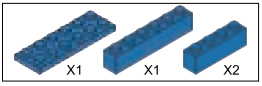

3-13

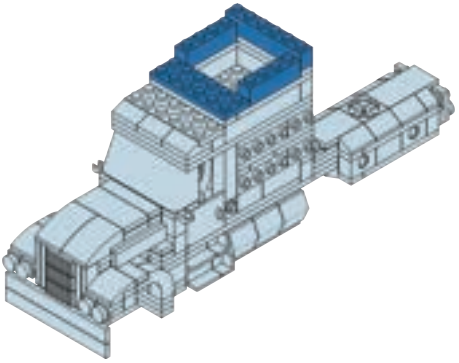



3-14

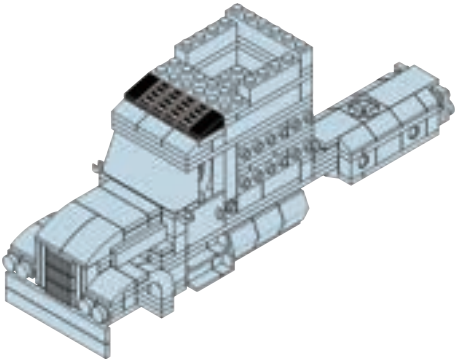



3-15

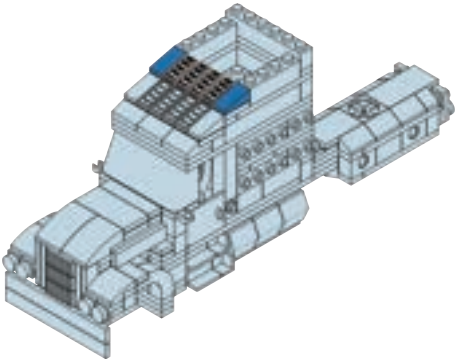

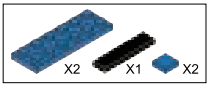

3-16

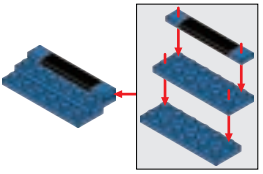

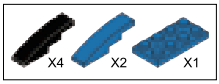

3-17

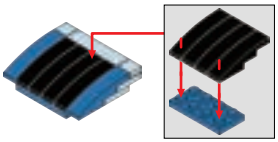

3-18

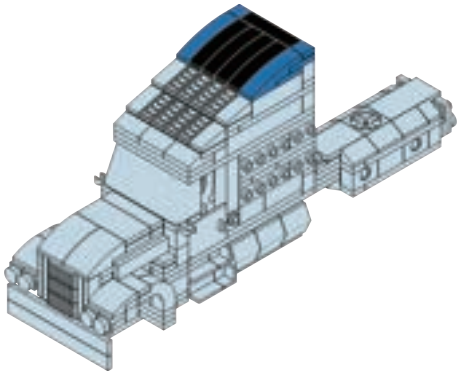

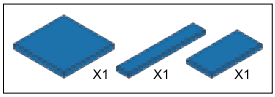

3-19

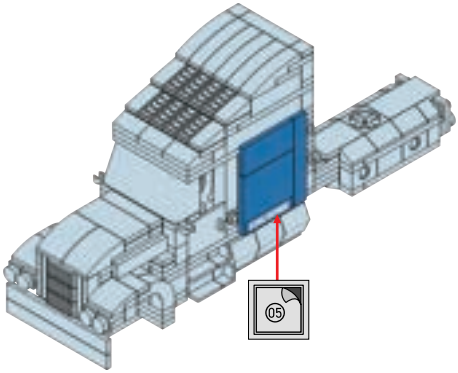

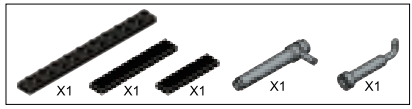

3-20

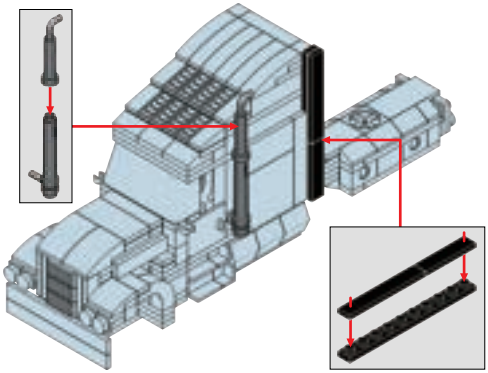

K51962

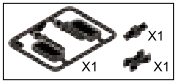

3-21

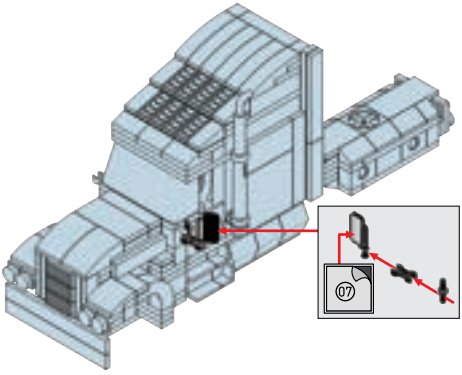

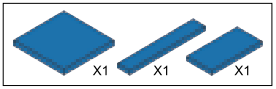

3-22

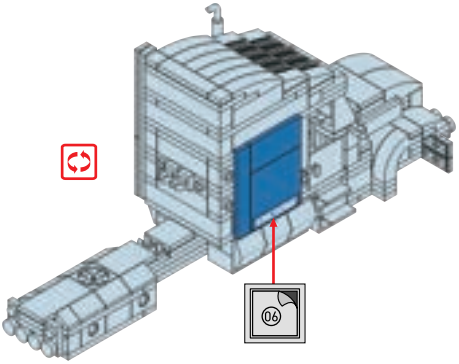

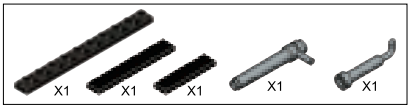

3-23

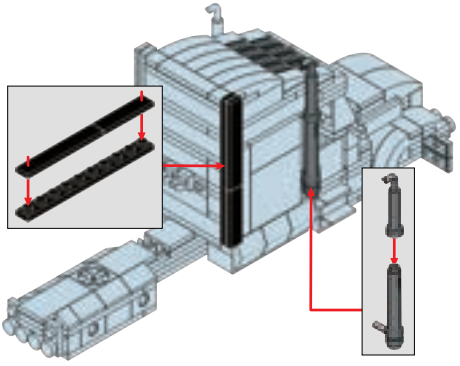

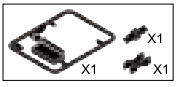

3-24

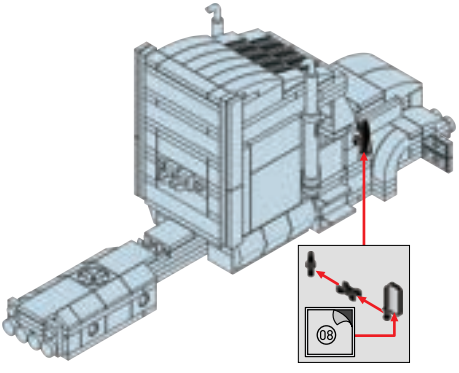



3-25

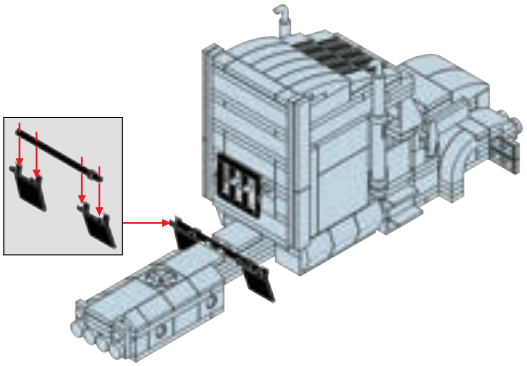



3-26

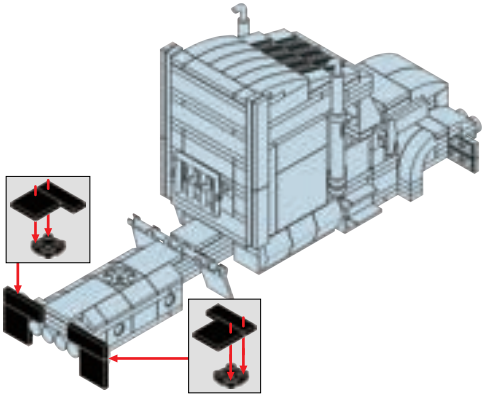

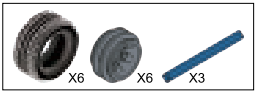

3-27

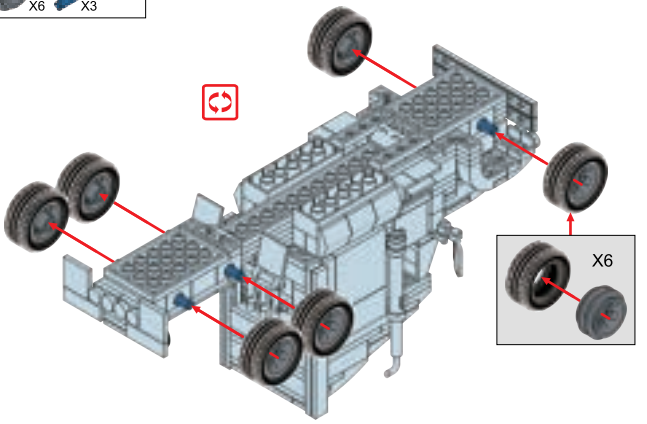

3-28

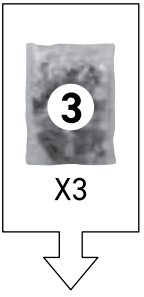



K51962

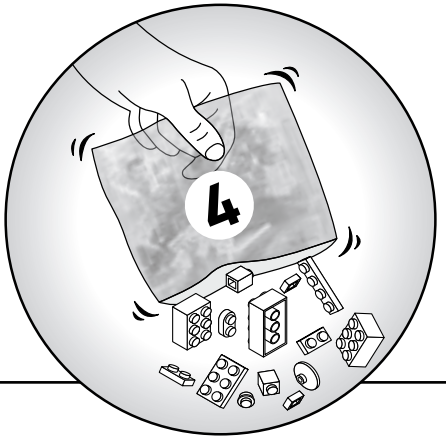
4


4

x3

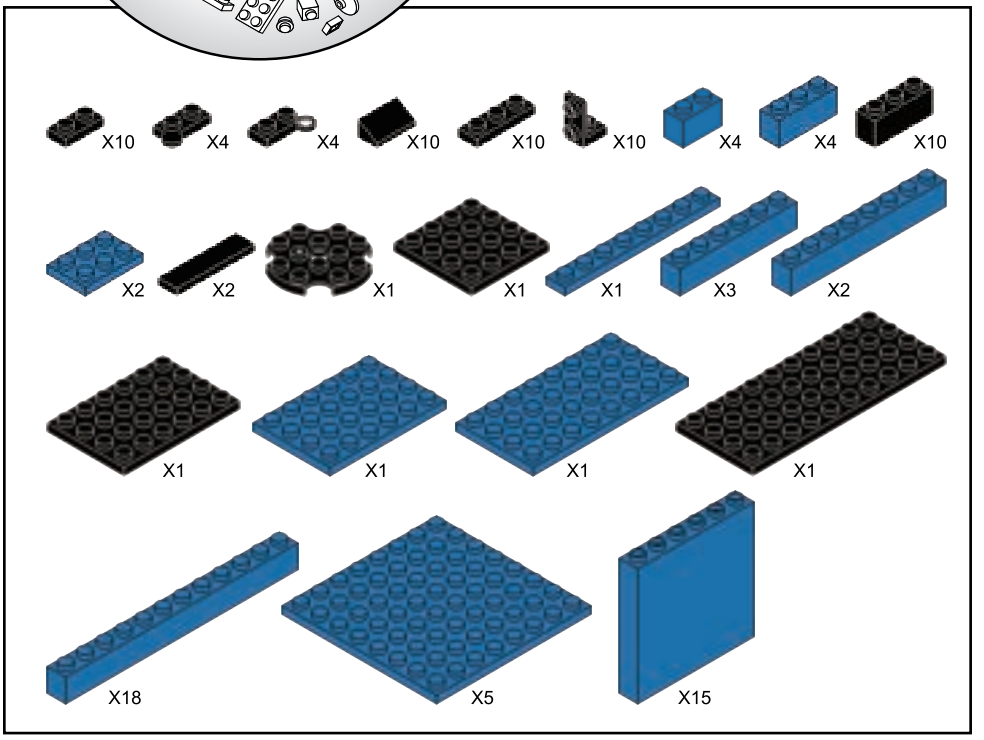
X10
X4
X4
X10
X10
X10
X4
X4
X10
X2
X2
X1
X1
X1
X3
X2
X1
X1
X1
X1
X18
X5
X15

K51962

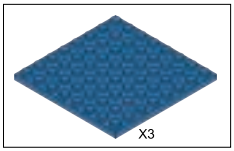

4-1

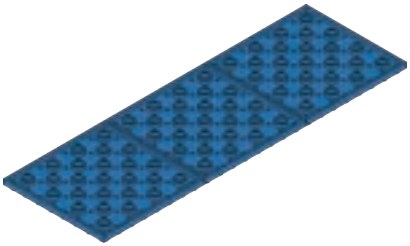

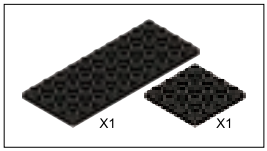

4-2

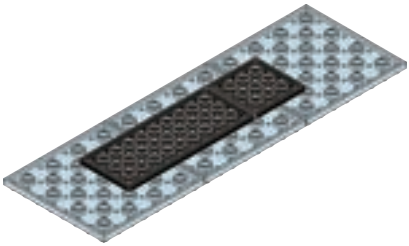

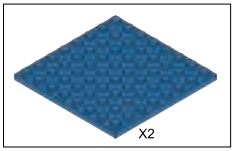

4-3

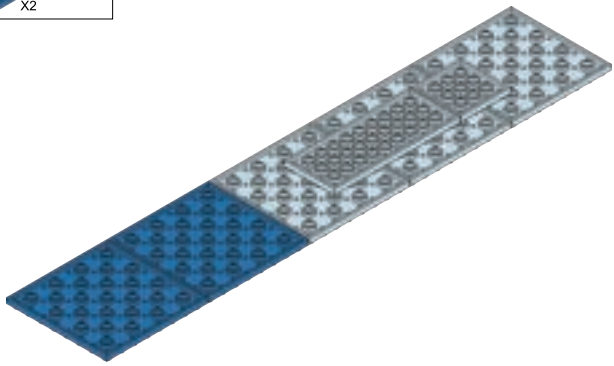

K51962

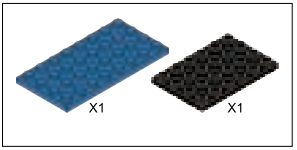

4-4

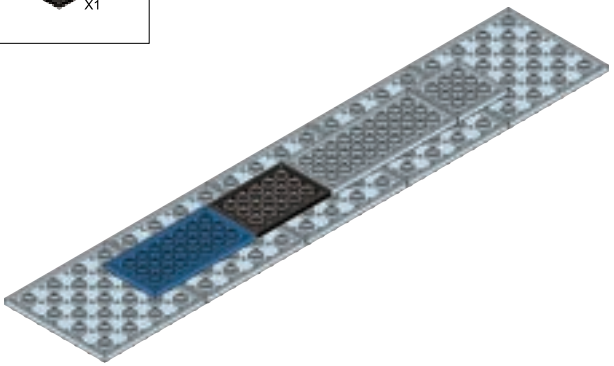

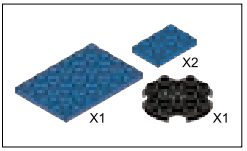

4-5

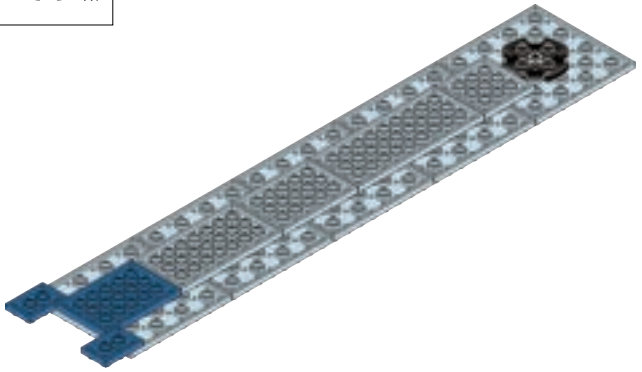

K51962

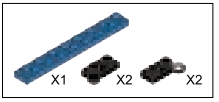

4-6

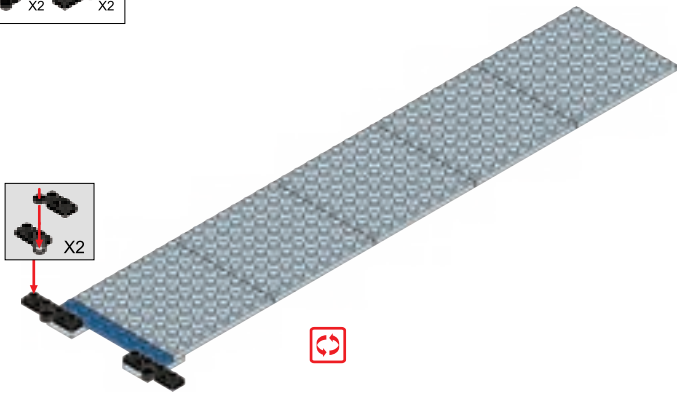

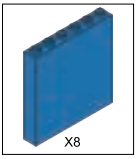

4-7

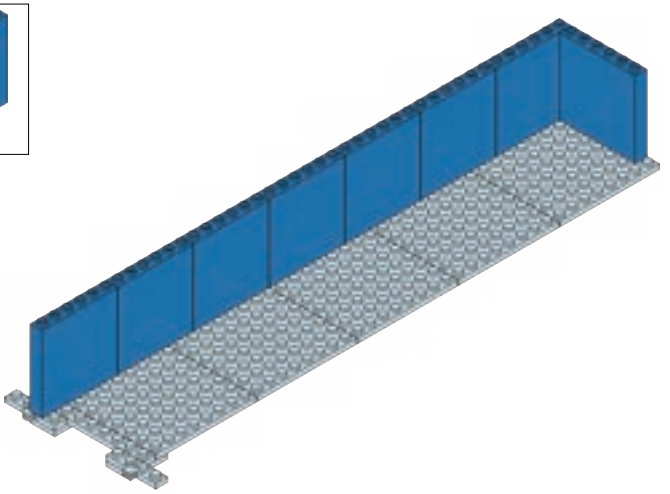

K51962

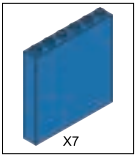

4-8

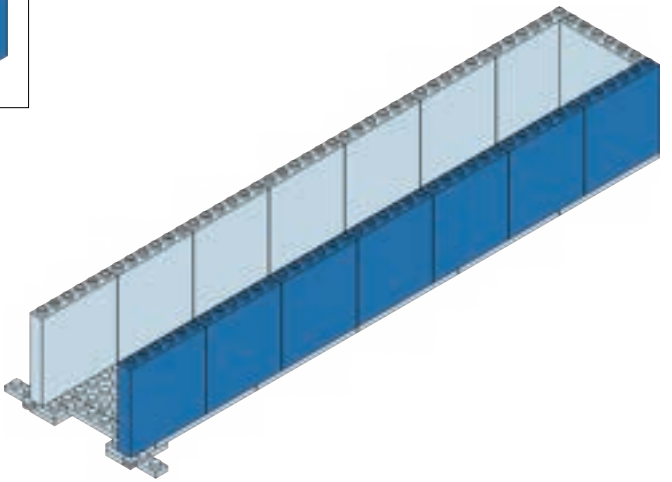

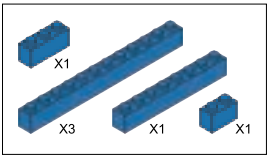

4-9

K51962

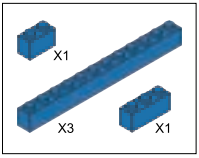

4-10

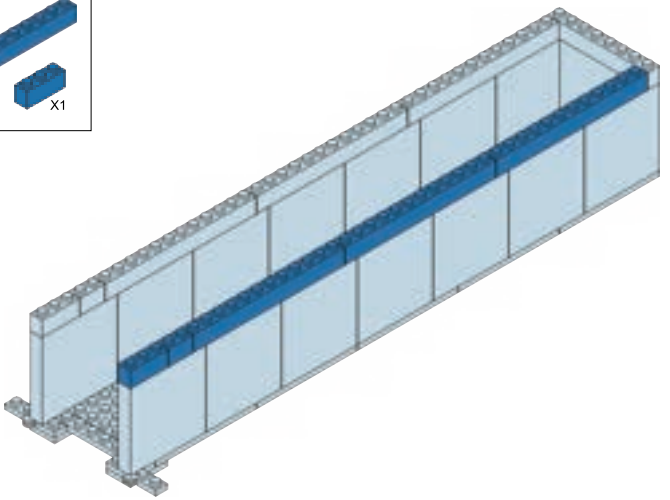

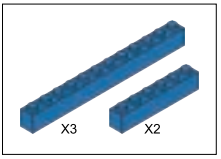

4-11

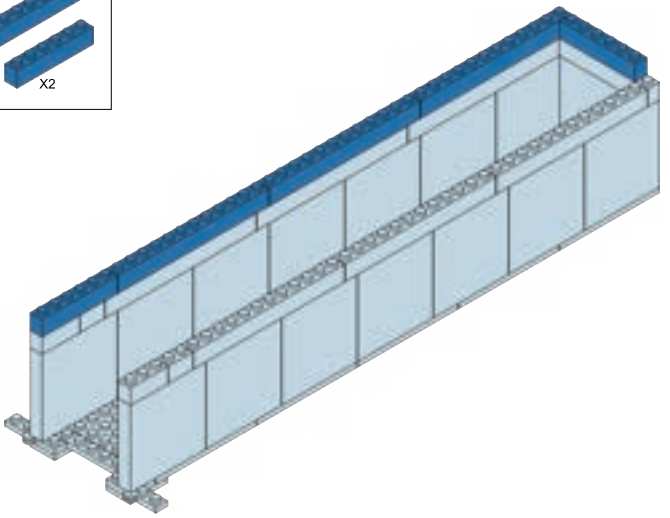

K51962

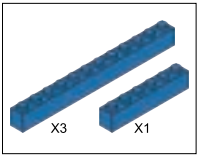

4-12

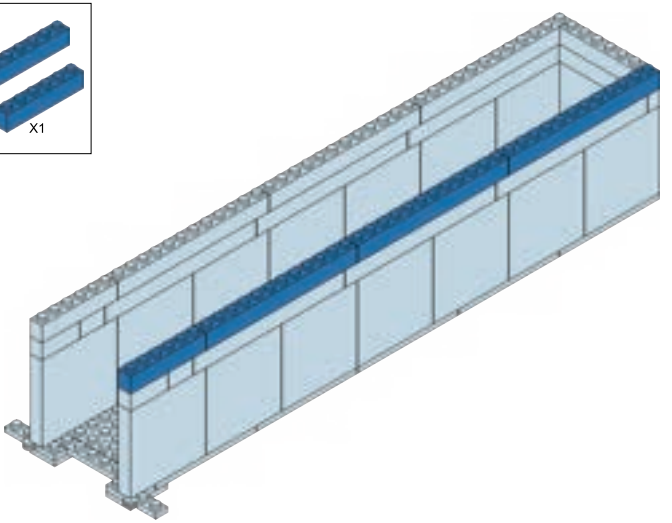

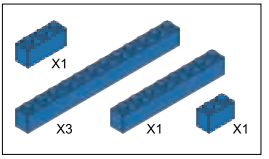

4-13

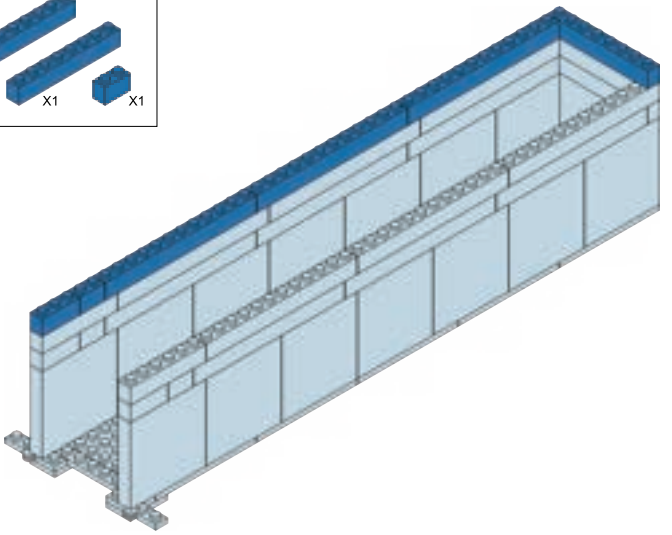

K51962

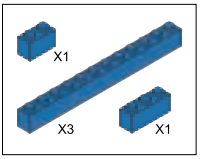

4-14

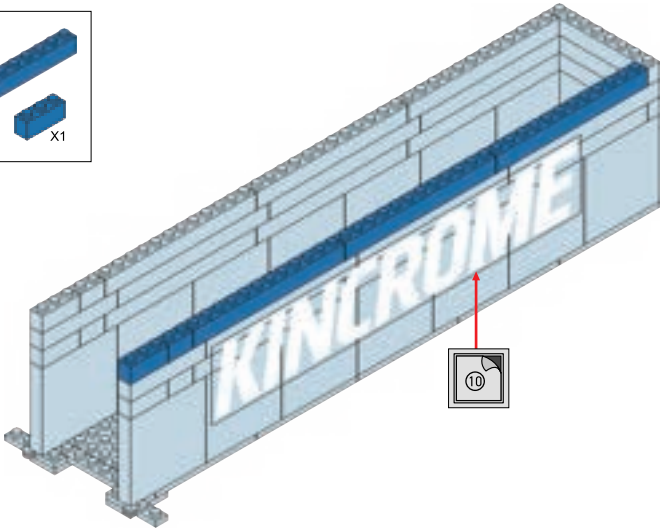



4-15

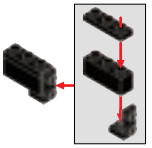



4-16

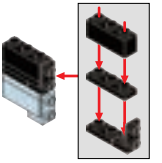

K51962



4-17

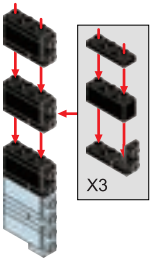



4-18

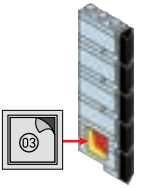



4-19

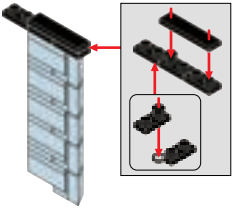

K51962

4-20

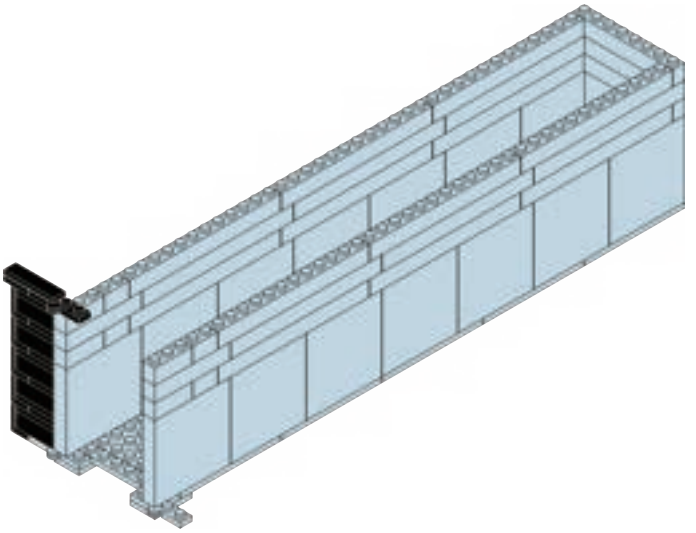



4-21

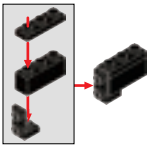

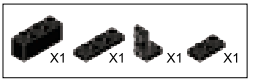

4-22

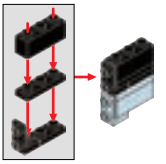

K51962



4-23

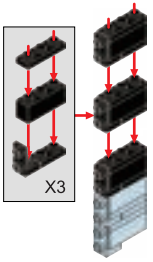



4-24

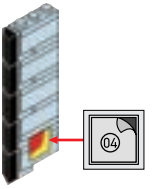



4-25

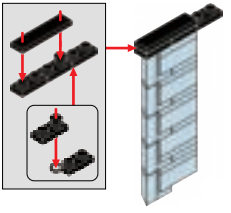

K51962

4-26



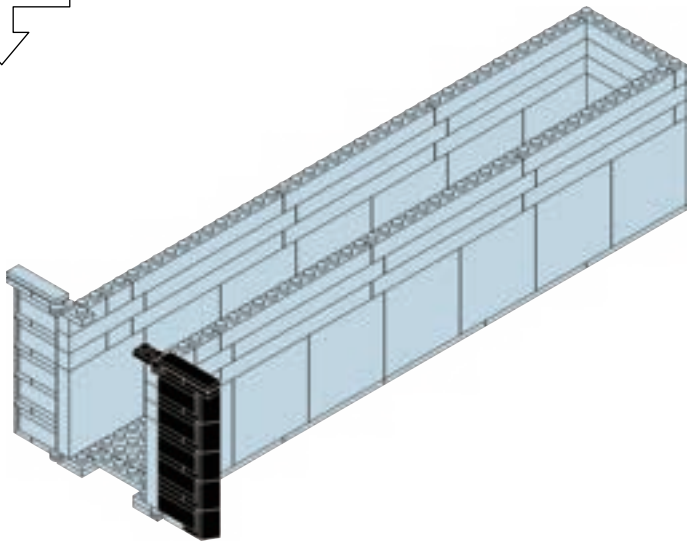

K51962


5


5

x3

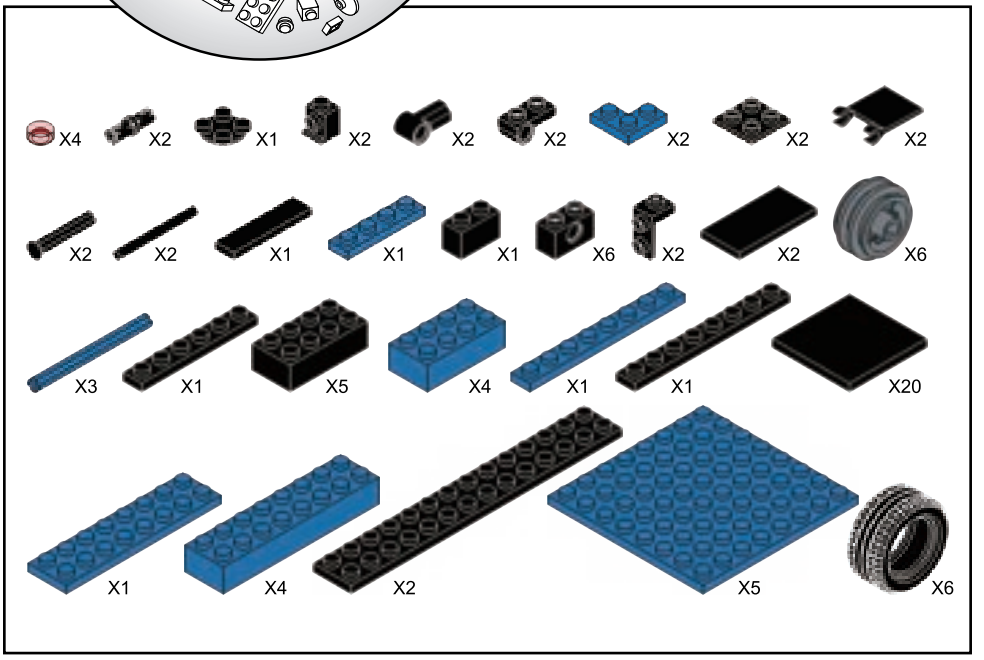
X4
X2
X1
X2
X2
X2
X2
X2
X2
X2
X2
X1
X1
X1
X6
X2
X2
X6
X3
X1
X5
X4
X1
X1
X20
X1
X4
X2
X5
X6

K51962

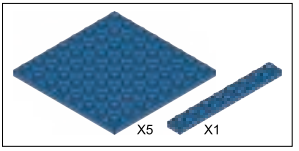

5-1

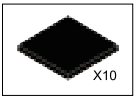

5-2

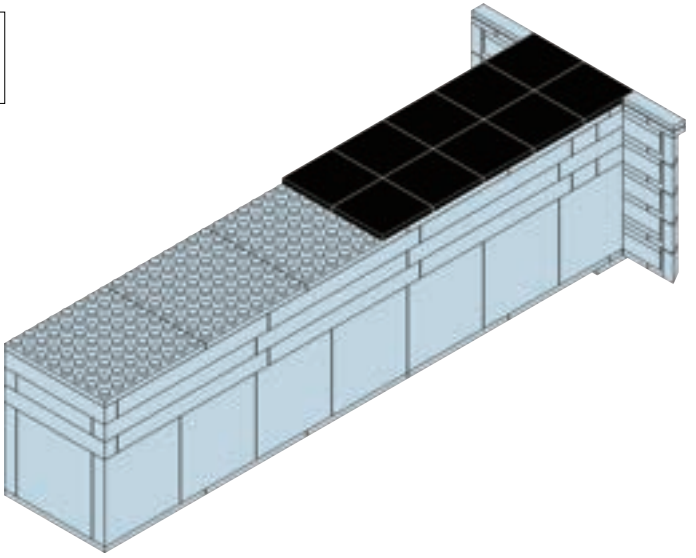

K51962

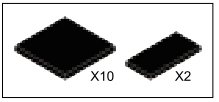

5-3

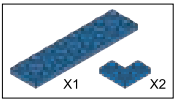

5-4

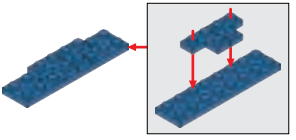

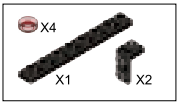

5-5

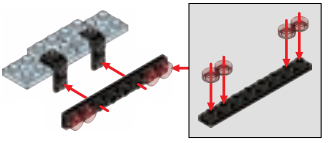

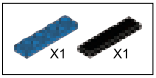

5-6

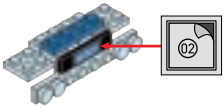

5-7

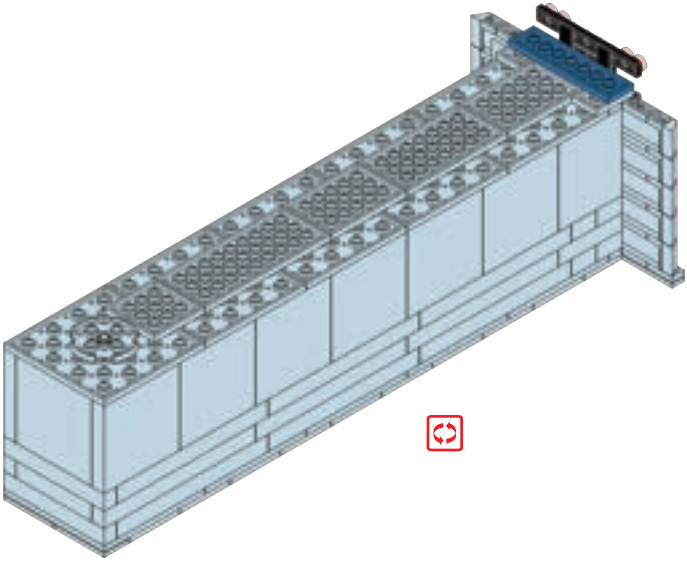

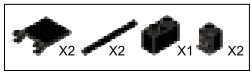

5-8

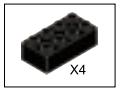

5-9

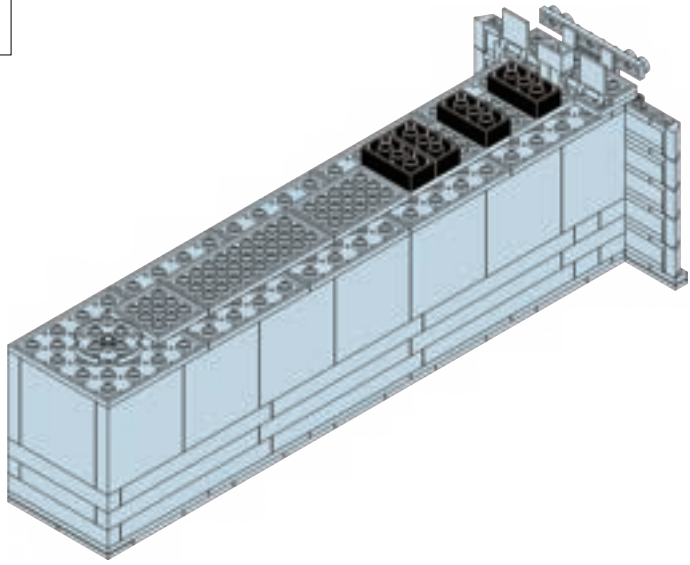

K51962

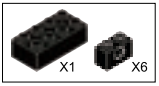

5-10

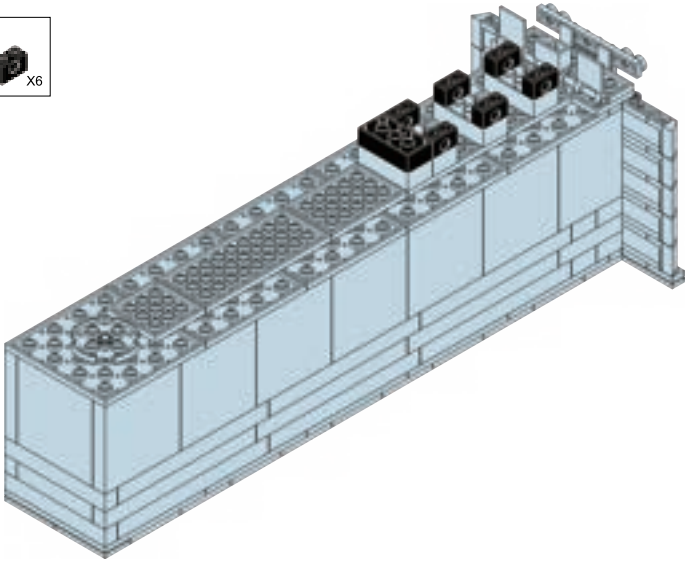

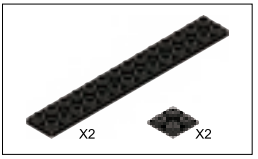

5-11

K51962

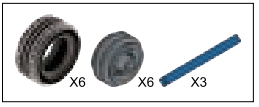

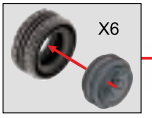

5-12

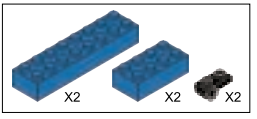

5-13

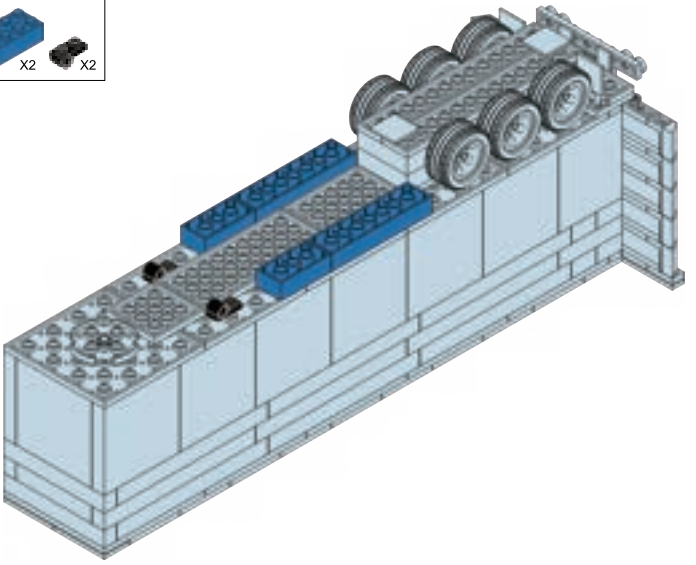

K51962

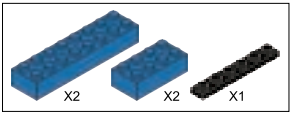

5-14

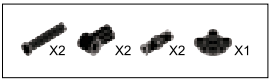

5-15

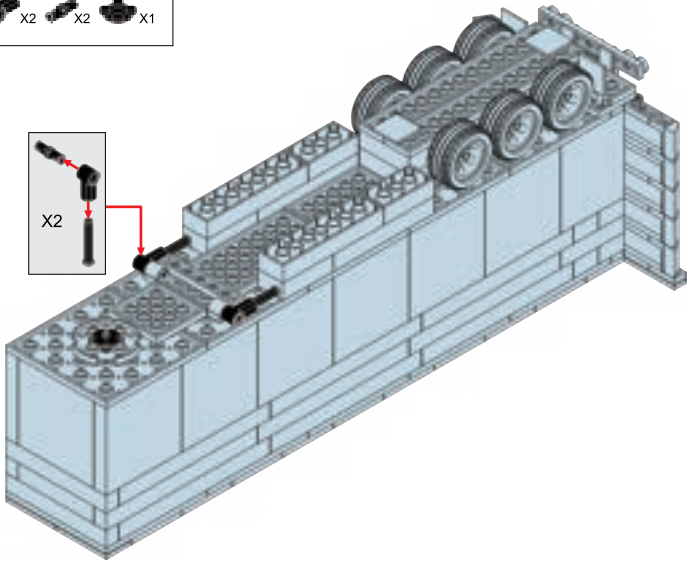

K51962

5-16



5-17

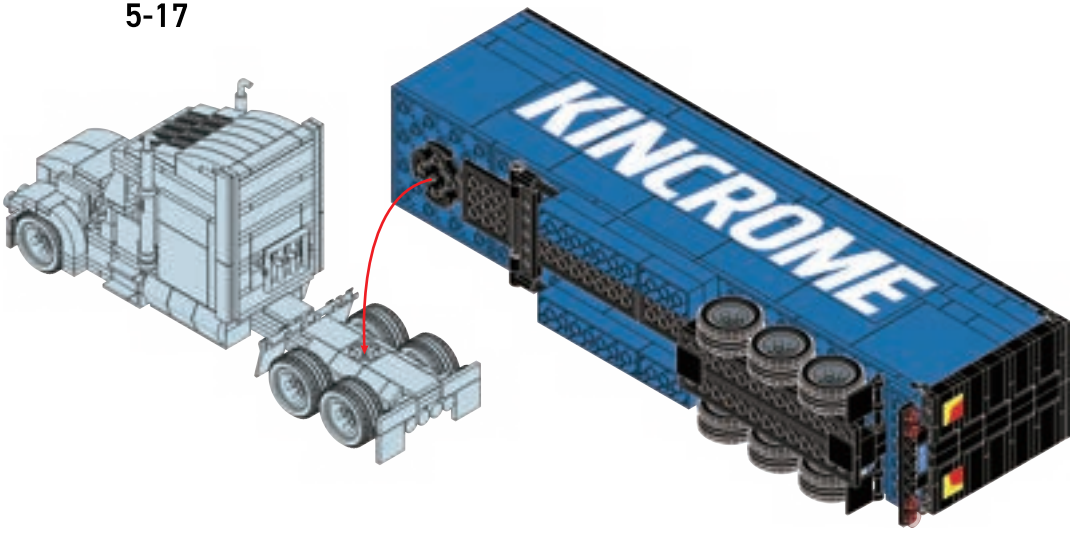

K51962

5-18

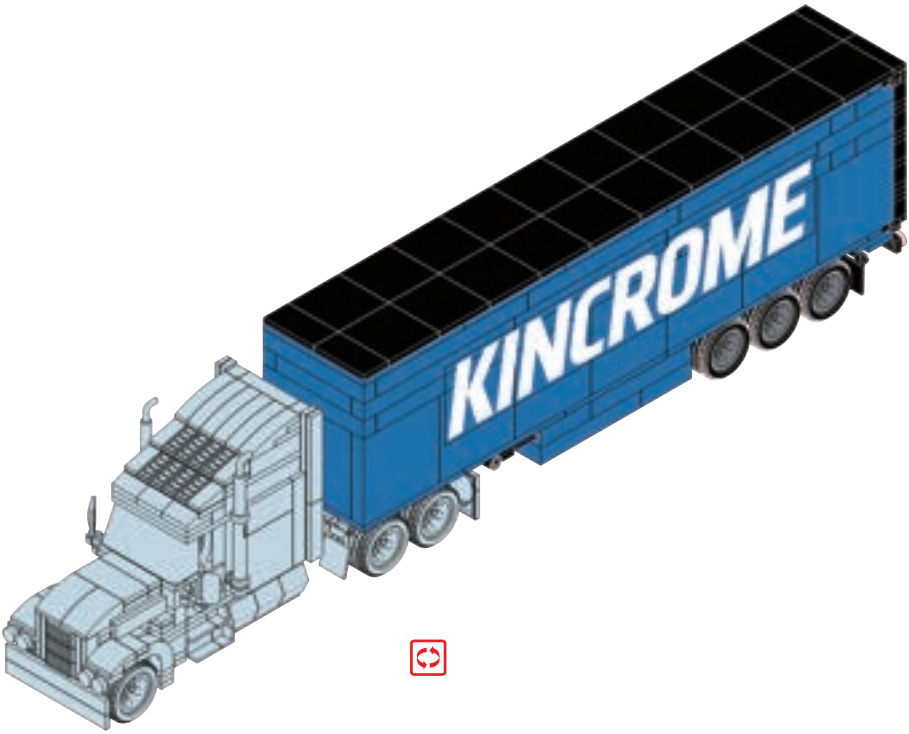

K51962

5-19



Notes

OFFICE CONTACT DETAILS

Phone: 1300 657 528 Email: enquiries@kincrome.com.au Website: www.kincrome.com.au

WARRANTY

Our goods and services come with guarantees that cannot be excluded under the Australian Consumer Law. For major failures with the service, you are entitled: -to cancel your service contract with us; and -to a refund for the unused portion, or to compensation for its reduced value. You are also entitled to choose a refund or replacement for major failures with goods. If a failure with the goods or a service does not amount to a major failure, you are entitled to have the failure rectified in a reasonable time. If this is not done you are entitled to a refund for the goods and to cancel the contract for the service and obtain a refund of any unused portion. You are also entitled to be compensated for any other reasonably foreseeable loss or damage from a failure in the goods or service'. Kincrome Australia Pty Ltd of 3 Lakeview Drive, Caribbean Park, Scoresby, Victoria (Tel 1300 657 528) also provides the Kincrome Lifetime Guarantee and 12-Month Warranty (Kincrome Express Warranties) in respect of some of its products. If a product is covered by a Kincrome Express Warranty and it has materials or workmanship defects (other than defects caused by abnormal or non warranted use) which are covered under the terms of the relevant Kincrome Express Warranty, you can, at your cost, send the product to the above address for repair or replacement. Your rights under a Kincrome Express Warranty are in addition to any other rights you have under the Australian Consumer Law or other applicable laws. For further details and terms please check our product guide, visit www.kincrome.com.au or call us. Every effort is made to ensure advertised stock is available, but due to factors beyond the control of Kincrome Australia Pty. Ltd, not all products advertised in this catalogue may be available at all stores. Kincrome Australia Pty. Ltd. reserves the right to correct printing errors. All sizes shown are approximate only. Accessories shown do not come with the product unless otherwise specified. Due to printing process, colours in this catalogue may vary slightly to actual item. E. & O. E.© Copyright 2022. Reproduction in whole or in part is prohibited without written approval.

22
PAP

FOR AGES
6+

WARNING:
CHOKING HAZARD - Contains Small Parts not for children under 3 years
SUPERVISION - This product is intended to be used under parental supervision at all times