# TOOL TROLLEY
## 6 DRAWER (660mm/26")
**STP7726**

## OPERATION MANUAL

***CAUTION: TAKE SAFETY PRECAUTIONS WHEN USING YOUR TOOLBOX***

Do not open more than one drawer at a time. | Do not step on drawers. | Do not let children near the Toolbox. | Do not separate Chest from Trolley. | Do not exceed Drawer Load Limit | Not suitable for mounting in Vehicles | Set the brake on the locking castors unless your are moving the Toolbox. | Lock drawers and lid before moving the Toolbox.

***IMPORTANT:***

*THIS OPERATING MANUAL CONTAINS IMPORTANT SAFETY INFORMATION. READ CAREFULLY AND UNDERTAND ALL INFORMATION BEFORE OPERATING TOOL TROLLEY SAVE THIS MANUAL FOR FUTURE USE.*

## PARTS LIST

### TOOL TROLLEY SPECIFICATIONS

| | Width | Depth | Height |
|---|---|---|---|
| **Overall** | 758mm | 461mm | 957mm |
| **Overall (w/out Castors)** | 758mm | 461mm | 812mm |
| **Small Drawers** | 583mm | 400mm | 57mm |
| **Deep Drawers** | 583mm | 400mm | 132mm |
| **Castor Size** | 114x38mm (4.5" x 1.5") 2 x Locking | | |
| **Weight** | 42.6kg | | |

**7 x EVA Liners**

**Trolley Handle**

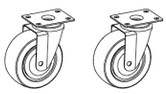

**Non-Locking Castors x 2**

**Locking Castors x 2**

**Keys x 2**

**16 x 12mm Bolts for Castors**

**4 x 10mm Bolts for Handle**

## TOOLS & ASSISTANCE NEEDED

**2 People Lift**

**Castor**

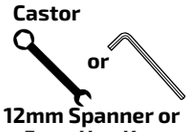


**12mm Spanner or 5mm Hex Key**

**Handle**

**10mm Spanner**

# TOOL TROLLEY
## 6 DRAWER (660mm/26")
**STP7726**

## ASSEMBLY INSTRUCTIONS

**1 Handle Installing**

- Position the trolley side handle behind the holes on the trolley.
- Attach with (4) bolts and tighten with an adjustable wrench.

**Note:** The side handle can be mounted to either side of the trolley.

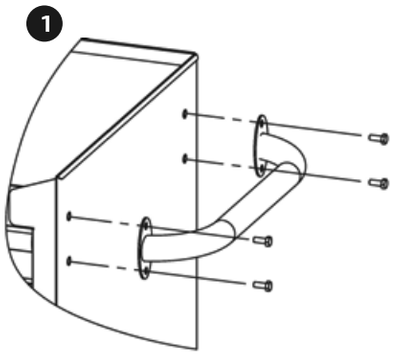


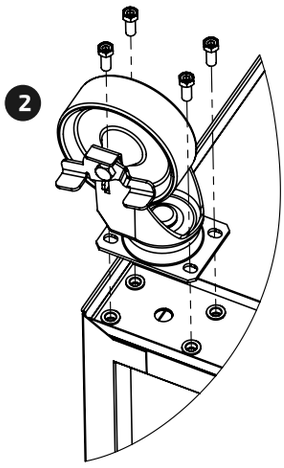


**2 Castor Installing (If applicable)**

- Be sure the drawers are locked and lay the trolley on its side.
- Secure castors to the unit using the 12mm bolts provided.
- Tighten with a 12mm spanner or 5mm hex key.
- Repeat this process for the castors on the opposite of the trolley.
- Return the trolley to its upright position.

**Caution:** Do not over tighten the bolts.
**Caution:** Both locking castors must be fitted to front of trolley.

## MAINTENANCE

**1 Removing the Drawers**

- Fully extend the empty drawer.
- Push up the right grey release lever while pushing down the left grey release lever.
- Pull the drawer outward until it is released from the drawer slide.

**2 Re-Inserting The Drawers**

- Extend the drawer slides.
- Insert the brackets on each side of the drawer into the slots on the slides, being careful that they are properly positioned.
- Once properly inserted, completely close the drawer to set the slides in their proper positions.

**3**

- Periodically tighten all hardware
- Periodically lubricate castors
- Lubricate the slides twice a year
- Lubricate the lock with graphite annually
- Use a damp Microfibre cloth to clean all surfaces

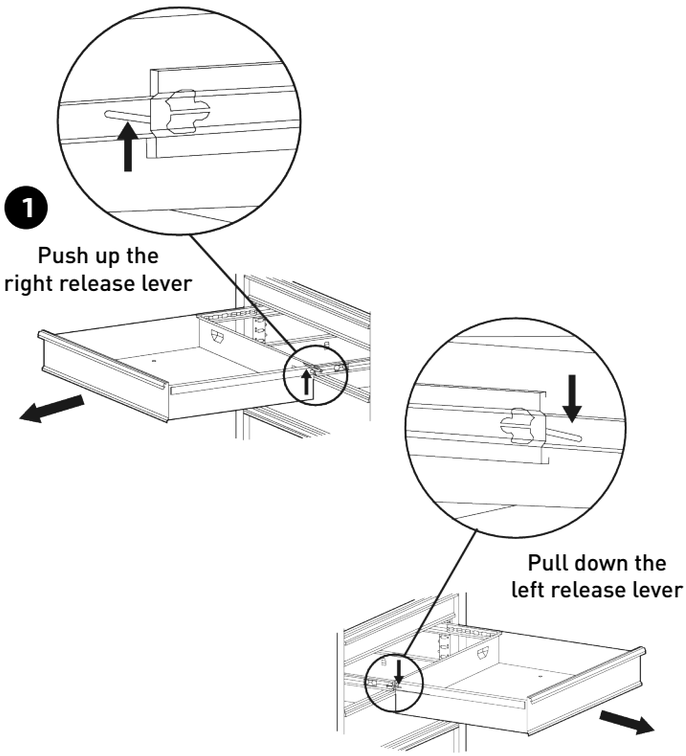

# TOOL TROLLEY
## 6 DRAWER (660mm/26")
**STP7726**

## REPLACEMENT PARTS

| ITEM | PART NO. | DESCRIPTION | QUANTITY |
|---|---|---|---|
| 1 | STP7779 | Key Only (Specify Key Number) X 1 | 1 |
| 2 | STP7778 | Lock & Key | 1 |
| 3 | STP7736-3 | Trolley Handle | 1 |
| 4 | STP7726-3 | Ball Bearing Slide (Pair) | 6 |
| 5 | STP7736-8 | Castor Swivel x 1 | 2 |
| 6 | STP7736-9 | Castor Swivel x 1 (Locking) | 2 |
| 7 | STP7736-10 | Castor Bolt Pack | 1 |
| 8 | STP7726-4 | EVA Mat Pack 7 Piece | 1 |


National Head Office
National Distribution and Showroom
3 Lakeview Dve, Caribbean Business Park
Scoresby Victoria 3179 Australia
ABN 41 007 185 006

Administration
T +61 3 9730 7100 F + 61 3 9730 7199

E enquiries@kincrome.com.au
W kincrome.com.au

Customer Service Centre
T 1300 657 528 F 1300 556 005

Made to Supatool Premium global specifications and quality standards in China

Kincrome UK Ltd PO Box 646 EASTLEIGH SO50 0NA

| Australia & Global | UK & EU |
|---|---|
| www.kincrome.com.au | www.kincrome.co.uk |
| enquiries@kincrome.com.au | enquiries@kincrome.co.uk |