TOOL TROLLEY
5 DRAWER

K7795

Operation Manual

Caution: Take Safety Precautions When Using Your Toolbox

⚠ IMPORTANT:

THIS OPERATING MANUAL CONTAINS IMPORTANT SAFETY INFORMATION. READ CAREFULLY AND UNDERSTAND ALL INFORMATION BEFORE OPERATING TOOL. SAVE THIS MANUAL FOR FUTURE USE.

Do not open more than one drawer at a time.

Do not step on drawers.

Do not let children near the Toolbox.

Do not separate Chest from Trolley.

Do not exceed Drawer Load Limit

Not suitable for mounting in Vehicles

Set the brake on the locking castors unless your are moving the Toolbox.

Lock drawers and lid before moving the Toolbox.

Parts List

TOOL TROLLEY SPECIFICATIONS

	Width	Depth	Height
Overall	765mm	465mm	850mm
Overall (w/out Castors)	765mm	465mm	690mm
Top Section	670mm	455mm	15mm
Drawers			
Shallow	565mm	395mm	60mm
Deep	565mm	395mm	135mm
Castor Size	125x50mm (5"x2") 2x Locking		
Total Weight	45.3kg		

Non-Locking Swivel Castors (2)

Locking Swivel Castors (2)

Keys x 2

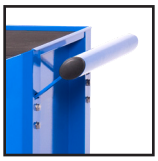

Trolley Handle x 1

16 x 12mm Bolts for Castors

4 x 10mm Bolts for Handle

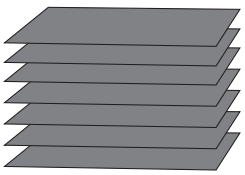

6 x Liners

TOOLS & ASSISTANCE NEEDED

2 People Lift

Castor

or

12mm Spanner or 5mm Hex Key

Handle

10mm Spanner

TOOL TROLLEY
5 DRAWER

K7795

Assembly Instructions

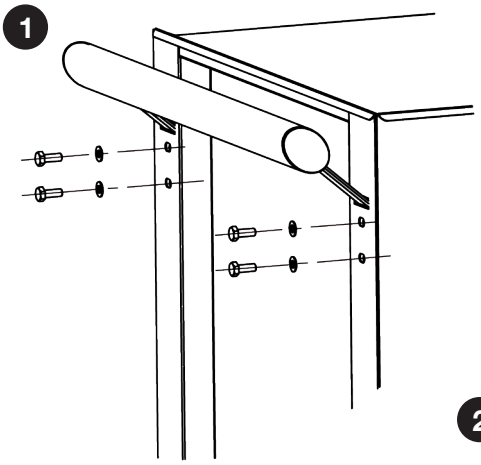

1 Handle Installing

- Position the trolley side handle behind the holes on the trolley.
- Attach with (4) bolts and washers and tighten with an adjustable wrench.

Note: The side handle can be mounted to either side of the trolley.

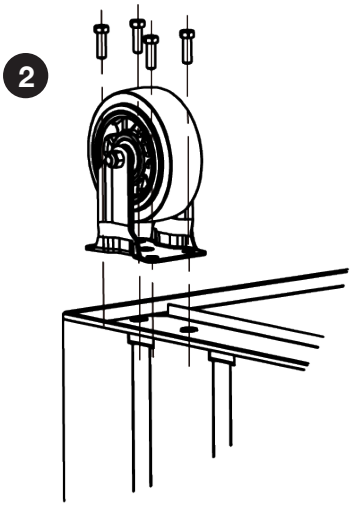

2 Castor Installing (If applicable)

- Be sure the drawers are locked and lay the trolley on its side.
- Secure castors to the unit using the 12mm bolts provided
- Tighten with a 12mm spanner or 5mm hex key
- Repeat this process for the castors on the opposite of the trolley.
- Return the trolley to its upright position.

Caution: Do not over tighten the bolts.
Caution: Both locking castors must be fitted to front of trolley.

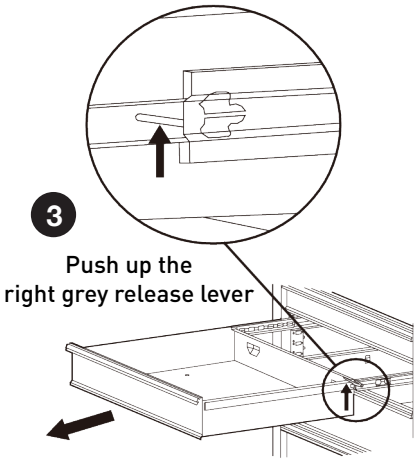

3 Removing the Drawers

- Fully extend the empty drawer.
- Push up the right grey release lever while pushing down the left grey release lever.
- Pull the drawer outward until it is released from the drawer slide.

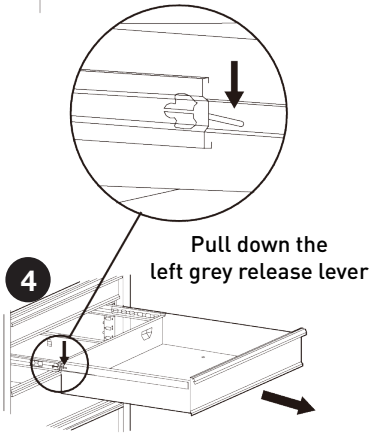

4 Re-Inserting The Drawers

- Extend the drawer slides.
- Insert the brackets on each side of the drawer into the slots on the slides, being careful that they are properly positioned.
- Once properly inserted, completely close the drawer to set the slides in their proper positions.

MAINTENANCE

- Periodically tighten all hardware
- Periodically lubricate castors
- Lubricate the slides twice a year
- Lubricate the lock with graphite annually
- Use a damp Microfibre cloth to clean all surfaces

TOOL TROLLEY
5 DRAWER

K7795

Replacement Parts

ITEM	PART NO.	DESCRIPTION	QUANTITY
1	K7888	Key Only (Specify Key Number) x1	1
2	K7787-1	Lock & Key	1
3	K7787-3	Trolley Handle	1
4	K7787-4	Ball Bearing Slides (Pair)	5
5	K7787-5	Drawer Grip (Large)	5
6	K7787-6	EVA Mat Pack 8 Piece	1

ITEM	PART NO.	DESCRIPTION	QUANTITY
7	K7787-7	Large Drawer (Shallow)	3
8	K7787-8	Large Drawer (Deep)	2
9	K7787-12	Castor Swivel X 1	2
10	K7787-10	Castor Swivel X 1 (Brake)	2
11	K7787-11	Castor Bolt Pack	1

KINCROME TOOLS + EQUIPMENT™

National Head Office
National Distribution and Showroom
3 Lakeview Dve, Caribbean Business Park
Scoresby Victoria 3179 Australia
ABN 41 007 185 006

Administration
T +61 3 9730 7100 F + 61 3 9730 7199
E enquiries@kincrome.com.au
W kincrome.com.au

Customer Service Centre
T 1300 657 528 F 1300 556 005

Made to Kincrome Tools & Equipment Pty Ltd Global specifications and quality standards in China
Kincrome UK Ltd PO Box 646 EASTLEIGH SO50

Australia & Global	UK & EU
www.kincrome.com.au	www.kincrome.co.uk
enquiries@kincrome.com.au	enquiries@kincrome.co.uk