TOOL TROLLEY

14 DRAWER | SUPER WIDE BODY 60"

K7864BB

Operation Manual

Caution: Take Safety Precautions When Using Your Toolbox

⚠ IMPORTANT:

THIS OPERATING MANUAL CONTAINS IMPORTANT SAFETY INFORMATION. READ CAREFULLY AND UNDERSTAND ALL INFORMATION BEFORE OPERATING TOOL TROLLEY.
SAVE THIS MANUAL FOR FUTURE USE

Do not open more than one drawer at a time.

Do not step on drawers.

Do not let children near the Toolbox.

Do not separate Chest from Trolley.

Do not exceed Drawer Load Limit

Not suitable for mounting in Vehicles

Lock drawers and lid before moving the Toolbox.

Set the brake on the locking castors unless your are moving the Toolbox.

Parts List

TOOL TROLLEY SPECIFICATIONS

Overall	Width	Depth	Height
(with castors)	1525mm	475mm	975mm
(without castors)	1525mm	475mm	475mm
Wide Drawers (Shallow)	650mm	400mm	65mm
Large Drawers (Shallow)	545mm	400mm	41mm
Large Drawers (Deep)	545mm	400mm	134mm
Large Drawers (Extra Deep)	545mm	400mm	193mm
Small Drawers (Shallow)	120mm	400mm	41mm
Small Drawers (Deep)	120mm	400mm	134mm
Small Drawers (Extra Deep)	120mm	400mm	193mm
Side Tray	175mm	300mm	12mm
Castor Size:	125mm x 50mm (5"x2")x2 Locking		
Weight	165kg		

Assembly Instructions

2 xKeys

1 x Trolley Handle

8 x Hex Bolts for Push Handle

1 x Power Handle

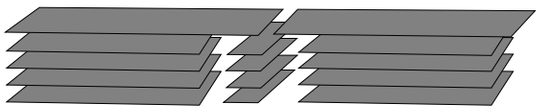

14 x EVA Liners

TOOLS & ASSISTANCE NEEDED

2 People Lift

Handle

5mm Hex Key

TOOL TROLLEY

14 DRAWER | SUPER WIDE BODY 60"

K7864BB

Assembly Instructions

Step 1: Get assistance to lift the trolley and slide the pallet from under the trolley. Castors are pre fitted.

Step 2: Using the 5mm Hex key provided, attach the 2 side trolley handles.

STORAGE OPTIONS

Can Accept 1 Or 2 K7526BB Boss Series Contour Chests.
(Sold Separately)

1 Handle Installing

- Position the trolley side handle behind the holes on the trolley.
- Attach with (4) bolts, and tighten with a 5mm Hex Key.

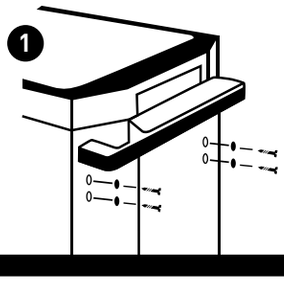

Maintenance

1 Removing the Drawers

- Fully extend the empty drawer.
- Push up the right release lever while pushing down the left release lever.
- Pull the drawer outward until it is released from the drawer slide.

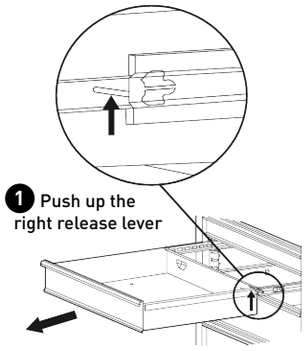

2 Re-Inserting The Drawers

- Extend the drawer slides.
- Insert the brackets on each side of the drawer into the slots on the slides, being careful that they are properly positioned.
- Once properly inserted, completely close the drawer to set the slides in their proper positions.

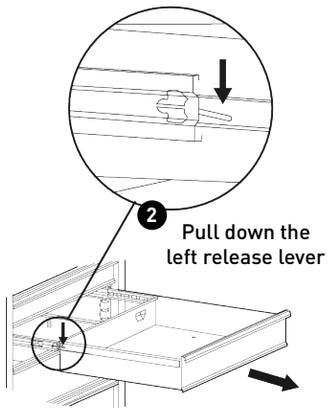

MAINTENANCE

- Periodically tighten all hardware
- Periodically lubricate castors
- Lubricate the slides twice a year
- Lubricate the lock with graphite annually
- Use a damp Microfibre cloth to clean all surfaces

TOOL TROLLEY

14 DRAWER | SUPER WIDE BODY 60"

K7864BB

Replacement Parts

REPLACEMENT PARTS

ITEM	PART NO.	DESCRIPTION	QUANTITY
1	K7778	Lock & Key	1
2	K7779	Key Only (Specify Number)	1
3	K7862-2	Plastic Trolley Top (1)	1
4	K7759-5	Trolley Handle (1)	1
5	K7741	Power Trolley Handle	1

ITEM	PART NO.	DESCRIPTION	QUANTITY
6	K7747-16	Ball Bearing Slides Pair (2)	14
7	K7862-13	Swivel Castor (1)	4
8	K7862-14	Swivel Castor (Brake) (1)	2
9	K7862-15	Castor Nut & Bolt Kit	1
10	K7862-17	Eva Mat Pack (20)	14

KINCROME TOOLS + EQUIPMENT™

National Head Office
National Distribution and Showroom
3 Lakeview Dve, Caribbean Business Park
Scoresby Victoria 3179 Australia
ABN 41 007 185 006

Administration
T +61 3 9730 7100 F + 61 3 9730 7199
E enquiries@kincrome.com.au
W kincrome.com.au

Customer Service Centre
T 1300 657 528 F 1300 556 005

Made to Kincrome Tools & Equipment Pty Ltd global specifications and quality standards in China

Australia & Global
www.kincromecom.au
enquiries@kincrome.com.au